SIMPLEX CHAIR

OSCAR TUSQUETS
2026

COMPONENTS, MATERIALS & FINISHES

Seat made in beech plywood and stained in three colours: oyster white (RAL 1013), cement grey (RAL 7033) and black (RAL 9011). Structure made of steel tubes powder-coated in satin finish, matching the wood color.

The seat is attached to the metal frame using four plastic spacers, which also help protect the wooden seat during stacking.

Feet equipped with plastic glides.

Optionally, an extra backrest made of beech plywood stained with the same finish as the seat can be added..

DIMENSIONS AND WEIGHT

52 x 46 x h. 73/80 cm - 5.5 kg / 6 kg with backrest
20.5" x 18.1" x h. 28.7"/31.5" - 13.7 lb / 14.1 lb with backrest.

PACKAGING

All models will be shipped assembled inside a cardboard box. Chairs can be shipped individually or in groups of 2. A pallet is required for 4 chairs shipment. For further information ask for the packaging sheet.

CLEANING AND MAINTENANCE

Wood should always be cleaned with a damp cloth and dried with a cotton cloth..

TESTS

Satisfactorily meets the specifications set by:
EN 16139:2025 – Strength, Durability and Safety Requirements for Non-Domestic Seating – Level 1 (Severe Contract Use)
EN 1022:2024 – Determination of Stability

SIMPLEX CHAIR

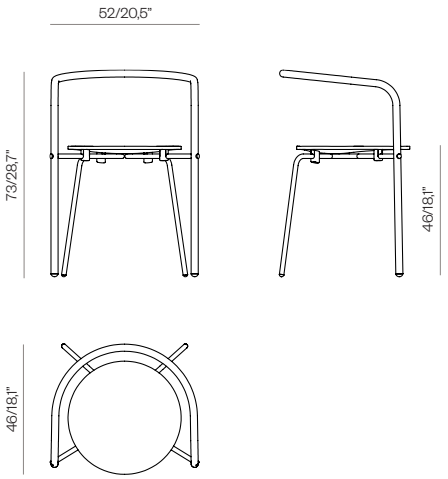

SIMPLEX CHAIR (WITH EXTRA BACKREST)

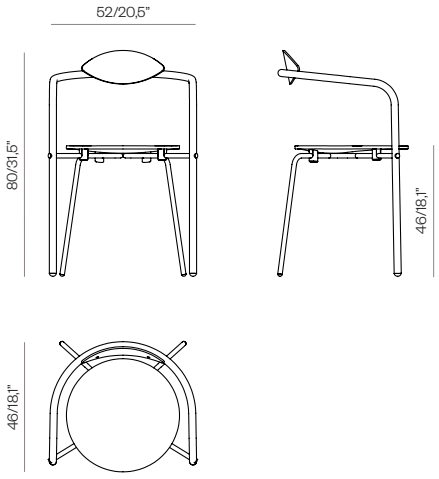

STACKABILITY

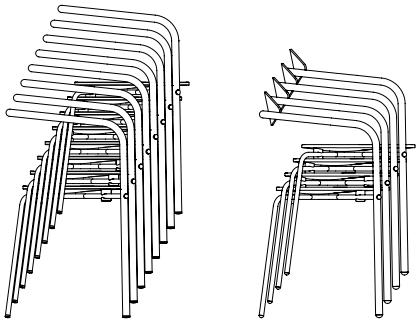

8 STACKED CHAIRS WITHOUT BACKRESTS (10 MAX.)
4 STACKED CHAIRS WITH BACKRESTS.

BD BARCELONA
RAMÓN TURRÓ 126, 08005 BARCELONA (SPAIN)
(+34) 934 586 909
BD@BDBARCELONA.COM
BDBARCELONA.COM

UPDATE 15/09/26