ADDIS

ADD-321-CH-WH

Flush

ADD-321-AG-AM

ADD-321-AG-AU

ADD-321-AG-CL

ADD-321-AG-SM

ADD-321-AG-SP

ADD-321-AG-WH

ADD-321-CH-AU

ADD-321-CH-CL

SPECIFICATIONS

Fixture Dimensions	22.25"W x 11.75"H x 22.25"D
Overall Height	11.75"
Chain/Rod	
Canopy/Backplate Dimensions	15.75"W x 1"H
Shade Dimensions	
Sloped Ceiling Compatible	No
Product Weight	42lbs
Location	Damp
ADA	No

MATERIAL DETAILS

Shade Material	
Product Material	Steel + Glass
Certification	UL, CUL, CSA

LAMPING

Light Source	6 light 60- watt, E12 Candelabra base
Wattage	60W
Bulb Count	6
Voltage	120v
Integrated LED	No
CRI	NA
Color Temperature	NA
LED Lifespan (Avg Hrs)	NA
Rated Lumens	NA
Delivered Lumens	NA

SHIPPING DETAILS

Carton Dimensions	24"L x 24"W x 25"H
Carton Weight	49lbs
Ship Type	Small Parcel

For custom options, contact the factory at custom@crystorama.com
For warranty information, visit www.crystorama.com

DESCRIPTION

The captivating Addis Lighting is a modern-day interpretation of the iconic mid-century Tronchi chandelier. Inspired by its predecessor's sleek lines and geometric shapes, the Addis features a Polished Chrome or Aged Brass metal frame that exudes sophistication and style. Its unique design showcases transparent tiers of textured Tronchi glass tubes, forming a mesmerizing 5-point rounded star shape. Choose from a range of glass colors, including clear, amber, smoke, and white, or the stunning Autumn and Spring options, which feature a captivating multicolor disposition. The Addis Collection offers various sizes and finishes, allowing you to find the perfect fit for your space while adding a touch of timeless elegance.

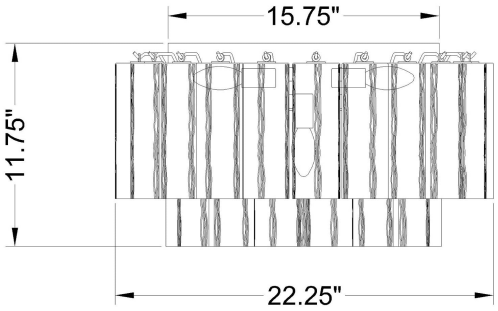

Project: