CRYSTORAMA LIGHTING

Crystorama.com

ASSEMBLY INSTRUCTION MODEL #BGT-330-SG-CL

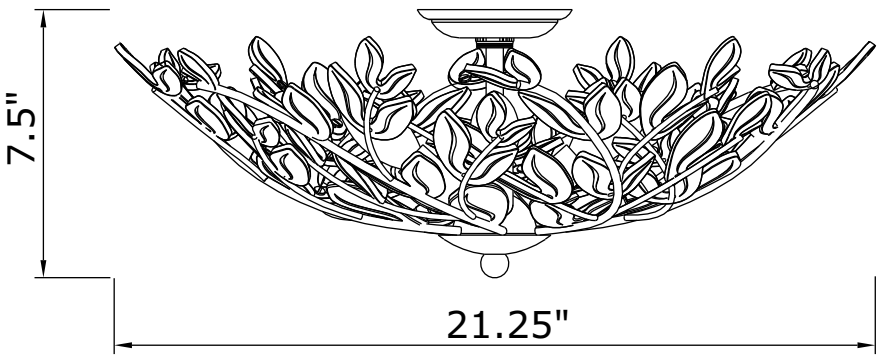

WARNING:

All electrical components must be installed by a licensed electrician in accordance with the National Electric Code and the appropriate local electrical codes.

You will need 4 -Candelabra Base Bulb
40 Watts Recommended 60 Watts Max.
USE LED BULBS FOR EXTENDED USE
THIS FIXTURE IS DAMP RATED

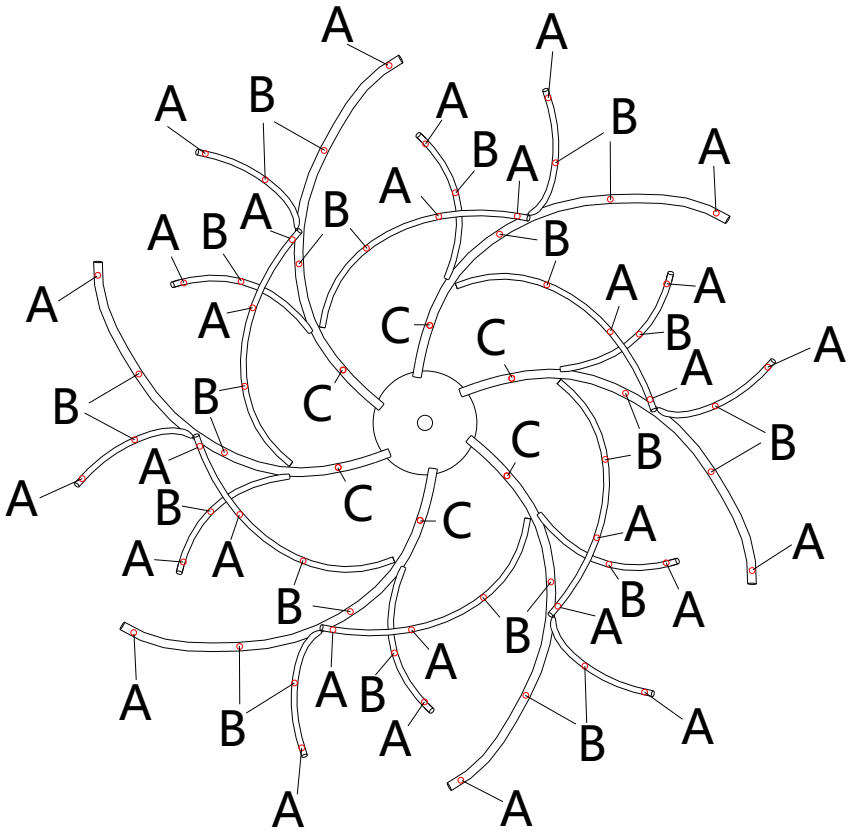

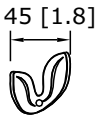

GLASS LEAVES A=30PCS

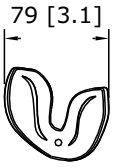

GLASS LEAVES C=6PCS

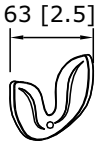

GLASS LEAVES B=30PCS

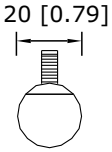

GLASS BALL =1PC

How to install

1. Place the frame on the foam block used for packaging. Ensure the foam block is covered with the pearl wrap to prevent the frame from being scratched during the installation of the glass leaves. See the illustration on the next page.
2. Starting from the bottom of the frame, assemble the glass leaves onto the frame using the screwdriver following the stickers on the frame. It is strongly recommended to remove one sticker at a time and install the corresponding glass leaf before removing the next sticker. Do not remove all the stickers at once. Do not overtighten the screws, as this may cause the glass to crack or break.
3. Slide the collar ring, glass dish, and canopy over the center stem in that order. Then attach the mounting strap to the center stem.
4. Raise the light cluster kit up over the outlet box and install the mounting strap onto the outlet box.
5. Do the wire connections and secure the canopy and glass dish with the collar ring.
6. Install recommended bulb onto the socket.
7. Raise the frame over the bottom of the light cluster and secure with the nut. Put the metal cap over the bottom of frame and secure with the glass finial.

⚠ **WARNING:** This product can expose you to Lead, which is known to the State of California to cause cancer and/or birth defects or reproductive harm. For more information go to www.P65Warnings.ca.gov.

CRYSTORAMA LIGHTING

Crystorama.com

PART NUMBER MODEL #BGT-330-SG-CL

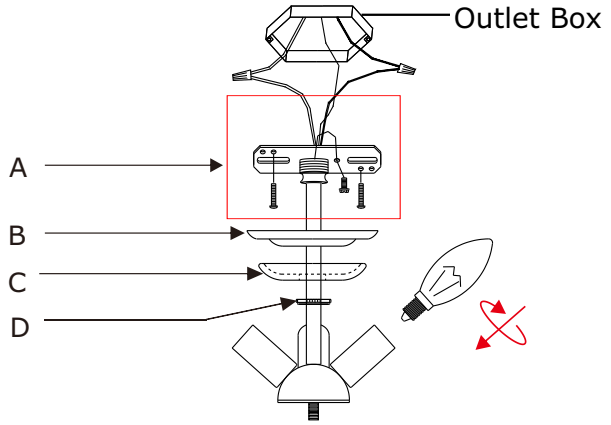

Part Number
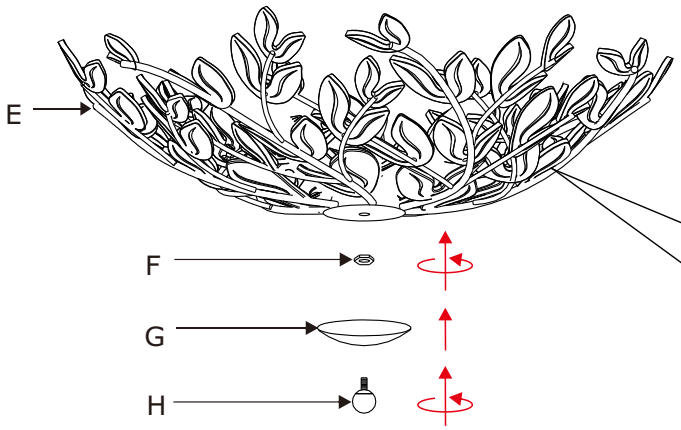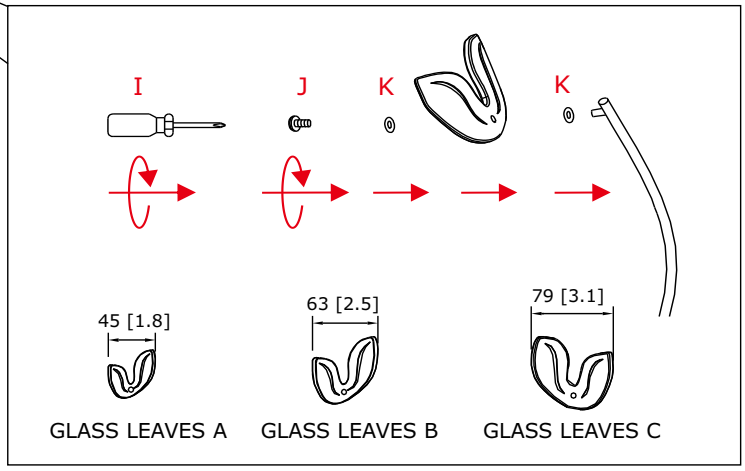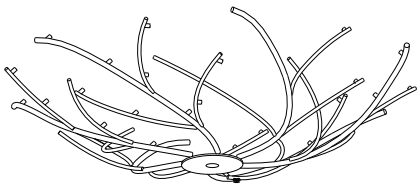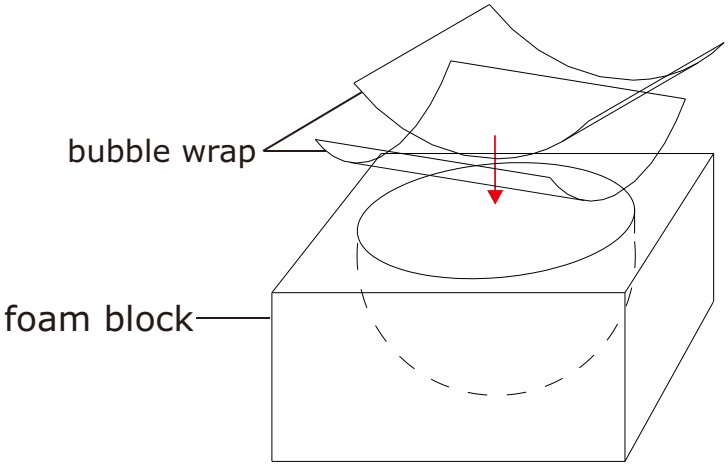
A. (1) - Mounting Hardware
B. (1) - Canopy(W5.5",H0,75") #XRE330SGCAN5.5IN
C. (1) - Glass Dish(W3.5",H0.76") #XRE330CLGLADIS3.5IN
D. (1) - Collar Ring
E. (1) - Frame
F. (1) - Hexnut
G. (1) - Metal cap #XRE330SGCLCAP
H. (1) - Glass Finial #XRE330SGCLFIN
I.(1) - Screwdriver
J.(126) - Screw
K.(252) - Plastic Washer
L.(30) - Glass Leaves A #XRE330CLGLA1.8IN
M.(30) - Glass Leaves B #XRE330CLGLA2.5IN
N.(6) - Glass Leaves C #XRE330CLGLA3.1IN