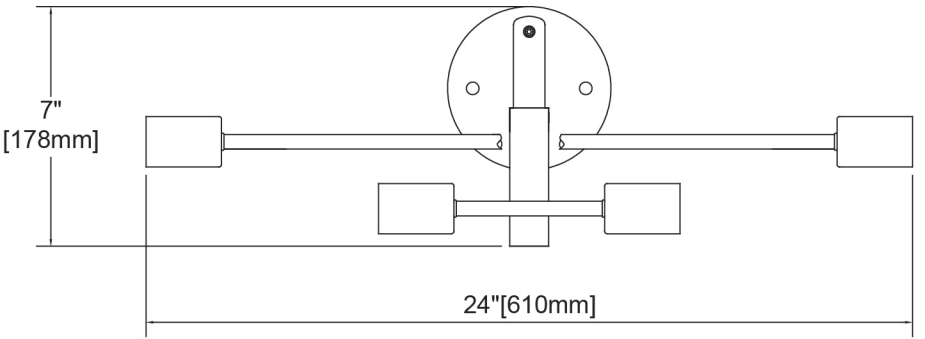
7"
[178mm]
24"[610mm]

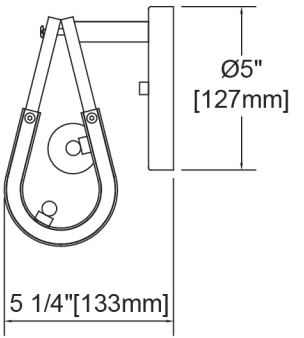
Ø5"
[127mm]
5 1/4"[133mm]