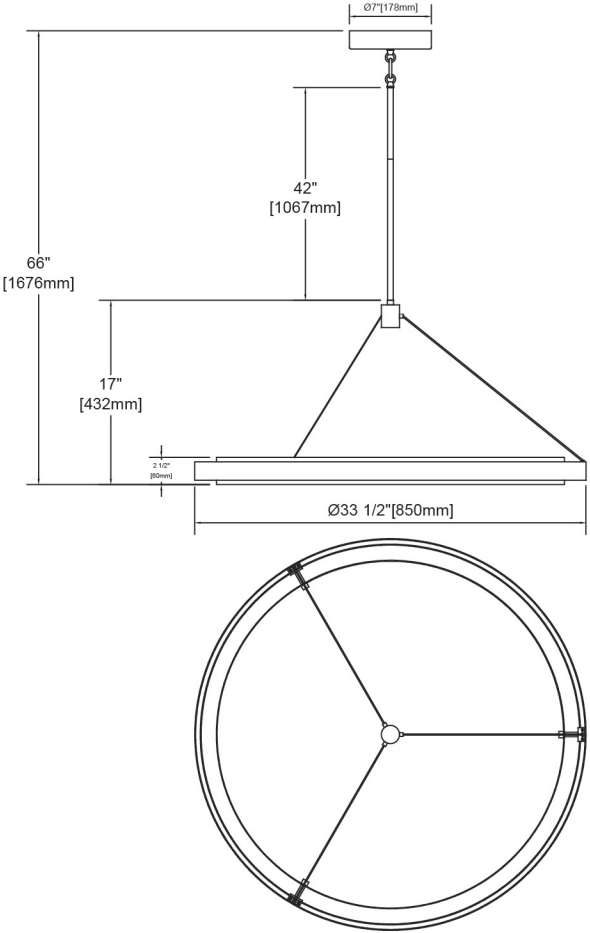
Ø7"[178mm]
42"
[1067mm]
66"
[1676mm]
17"
[432mm]
2 1/2"
[80mm]
Ø33 1/2"[850mm]