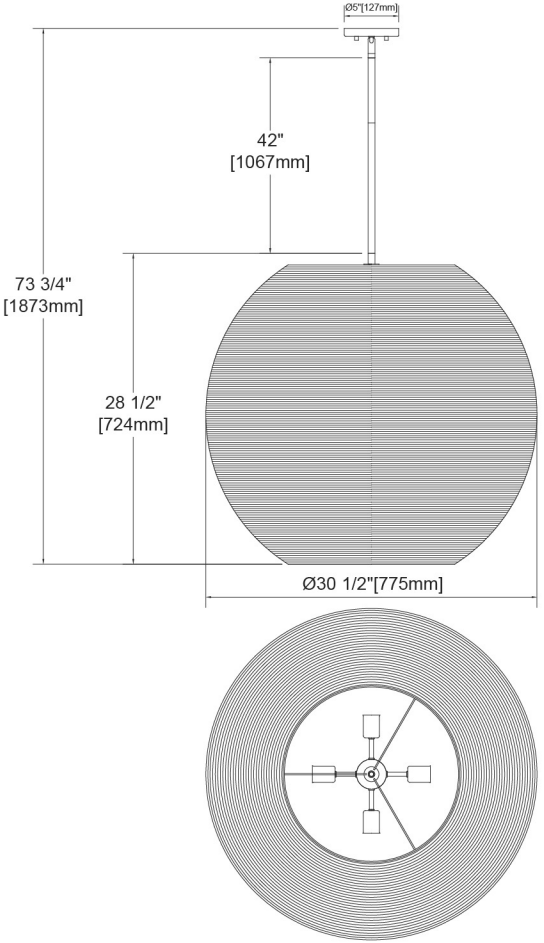
Ø5"[127mm]
42"
[1067mm]
73 3/4"
[1873mm]
28 1/2"
[724mm]
Ø30 1/2"[775mm]