Cambria | E25251-OY

Job Name:_____ Job Type:_____ Quantity:_____ Comments:_____







PRODUCT DESCRIPTION

Cambria shapes plaster into an organic study of light and shadow. Its softly rounded forms are pierced with oval openings, allowing illumination to filter through the shade with a warm, sculptural glow. Offered in Matte White with a coordinating white cord, the plaster surface may also be painted to complement the surrounding interior. Available in three pendant sizes and three flush mount sizes, Cambria brings quiet texture, architectural softness, and modern artistry to indoor spaces. Selectable 5CCT technology allows the light temperature to adjust from warm to crisp white.

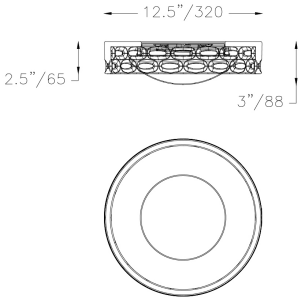

MEASUREMENTS

DIMENSION	: 12.5" L x 12.5" W x 3" H
CANOPY	: 7.5" W x 0.75" H x 7.5" L
HANGING WEIGHT	: 2 lb

LAMPING

INPUT VOLTAGE	: 120V
LUMENS	: 1,100 Rated (1,050 Del.)
BULB	: 1 x 15W LED AC Integrated , 15W Total
BULB INCLUDED	: (Integrated)
DIMMABLE	: Triac or ELV
CRI	: 90 CRI
COLOR_TEMP	: 27-30-35-40-50K

FINISHES OPTION

Oyster (OY)

MATERIAL

Gypsum, Steel, Acrylic

RATINGS

cETLus
Dry Location

ADDITIONAL

RATED LIFE 50000 Hours
OPERATING TEMPERATURE:
-20°C (-4°F), 40°C (104°F)

Always consult a qualified electrician before installing any lighting product.

ET2 Contemporary Lighting™

WESTERN DISTRIBUTION CENTER (HEADQUARTER)
253 NORTH VINELAND AVE I CITY OF INDUSTRY, CA 91746

EASTERN DISTRIBUTION CENTER
101 GARDNER PARK | PEACHTREE CITY, GA 30269

P. 626.956.4200 I F. 626.956.4225 I maximlighting.com