Gemma Floor Lamp

Assembly Guide

Thank you for choosing In Common With. Please confirm that you received all of the components pictured in this guide, and reach out to us if anything is missing. It's rare, but it happens. We hope you enjoy your fixture. With proper care, it should last a lifetime.

Have questions? Please contact us at support@incommonwith.com.

CAUTION!
As a safety feature, this lamp has a polarized plug to reduce the risk of electric shock. This means it has two flat prongs and a third circular prong underneath, and it will fit in an outlet one way only. If the plug does not fit fully and easily into the outlet, do not force it; contact a qualified electrician.

ATTENTION!
Par mesure de sécurité, cette lampe a une fiche polarisée pour réduire le risque de choc électrique. Cela signifie qu'il a deux broches plates et une troisième broche circulaire en dessous, et qu'il ne s'insère dans une prise que dans un seul sens. Si la fiche ne s'insère pas complètement et facilement dans la prise, ne la forcez pas; contactez un électricien qualifié.

Components

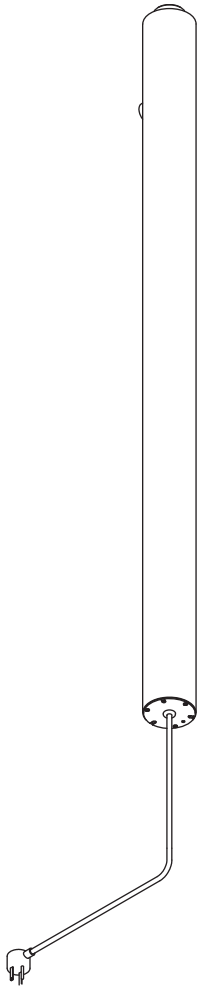

Floor Lamp Assembly

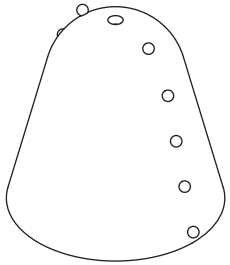

Gemma Shade

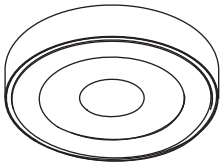

Floor Base

Finial

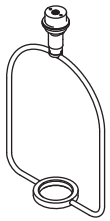

Harp

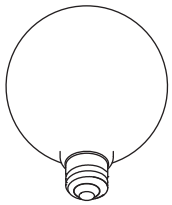

E26 Tala Sphere III Lightbulb

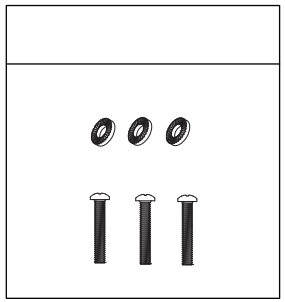

Hardware Pack

Step 1

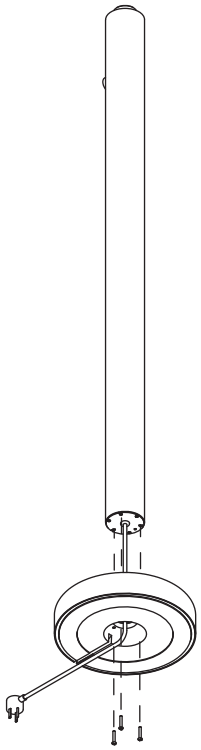

Flip the stem upside down. Pull the cord through the center hole in the floor base. Align the holes in floor base with the holes in the stem. Secure the stem to the base using the screws provided. We recommend tightening with a power driver. When secure, flip the lamp right side up, aligning the cord with the cord exit in the floor base.

Step 2

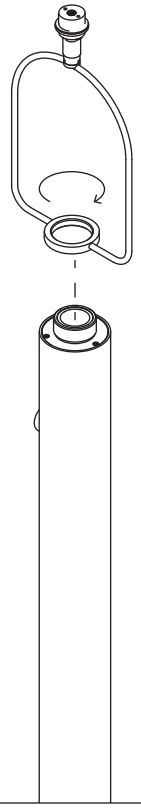

Thread the harp onto the top of the floor lamp assembly.

Step 3

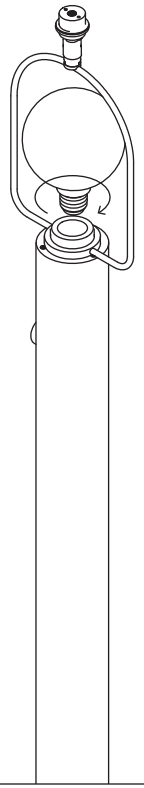

Screw bulb into place

Step 4

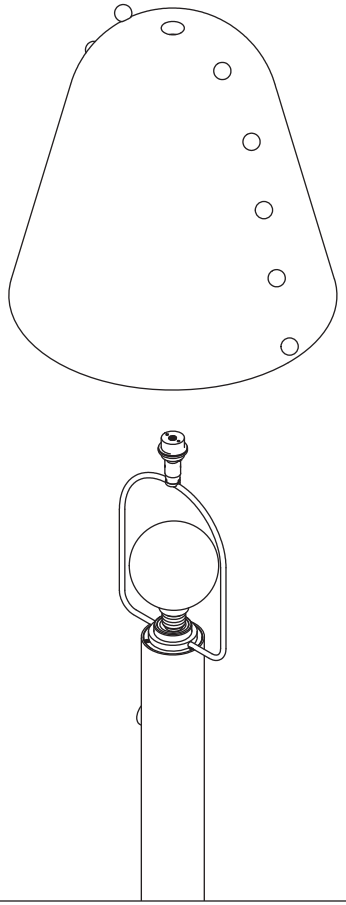

Align the hole of the glass shade with the hardware, feeding it through the hole in the shade.

Step 5

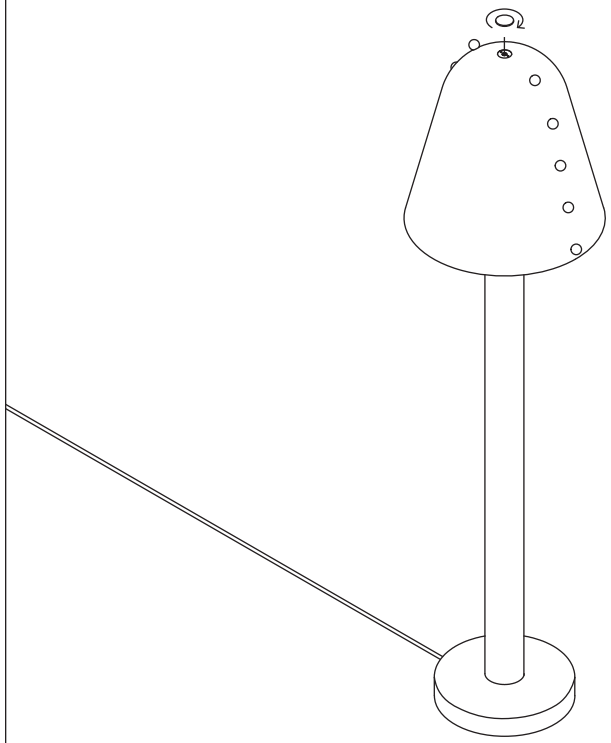

Screw finial onto harp. Once attached, gently level the shade.

Step 6

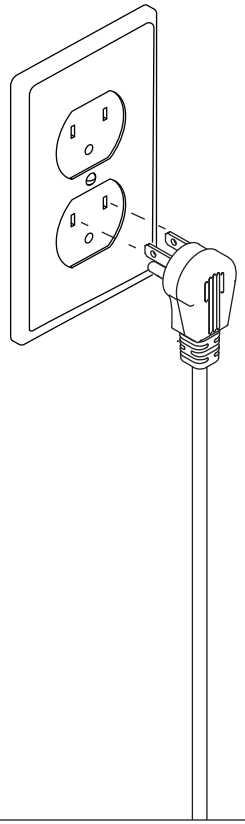

Plug in fixture and turn on light.

Never use scouring pads or abrasive cleaning solutions. If it comes in a bottle, it is bad for your fixture. Instead, we recommend using soft microfiber cloths, which are gentler on our products and the planet.

For Metal: Wipe with a damp or dry microfiber cloth. Please note that our brass is unlaquered, and will darken naturally over time.

For Glass: Wipe clear or colored glass with a damp microfiber cloth. For sandblasted or etched glass, use a dry microfiber cloth. Removable glass shades can be washed carefully in a sink using warm or hot water.

For Ceramic: Wipe with a damp microfiber cloth. Do not submerge in water.

Return Policy

We accept returns for store credit only, minus a 15% restocking fee. We do not accept returns on pieces from the Handmade, Disc, Terra, or Flora series, on the Ceramic or Colored Glass Up Down Sconces, or on items that are not in their original condition. Custom and Rush orders are final sale. Please note that shipping charges are non-refundable.

To request a return, email sales@incommonwith.com within ten days of receiving your order. Requests must be approved before a return can be processed. Requests made after ten days will not be accepted.

All products that come in their own box, including but not limited to light bulbs and accessories, must be returned in their original, undamaged box as this is considered part of the product. Once installed, products are no longer eligible for return.

We reserve the right to reject any returned items that do not meet the above requirements. If your return is rejected you will be notified via email.