JAMIE YOUNG Cº

Finley Fluted Two Door Cabinet - Pale Oak

20FINL-CA2PO

PLEASE FOLLOW THE INSTRUCTIONS LISTED BELOW:

IMPORTANT SAFETY INSTRUCTIONS
TOOLS NEEDED:
-Level
-Pencil
-Tape Measure
-Screwdriver
Assembly requires 2 or more people.
NOTE:
When unpacking, lay parts on a padded surface such as packaging provided. Be sure to locate all hardware before throwing away any packaging.

PARTS INCLUDED

A	Anti Tip-Kit (B)
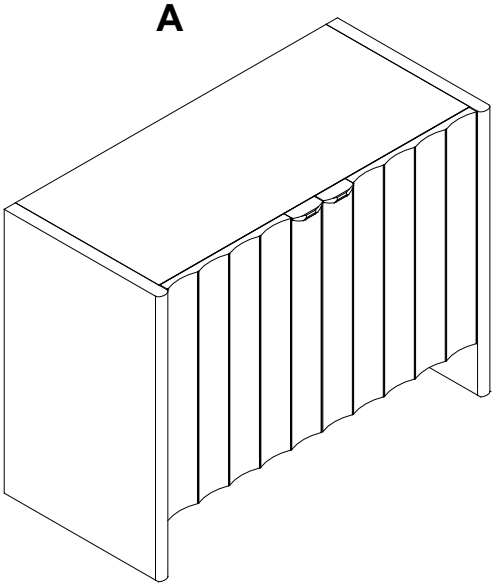	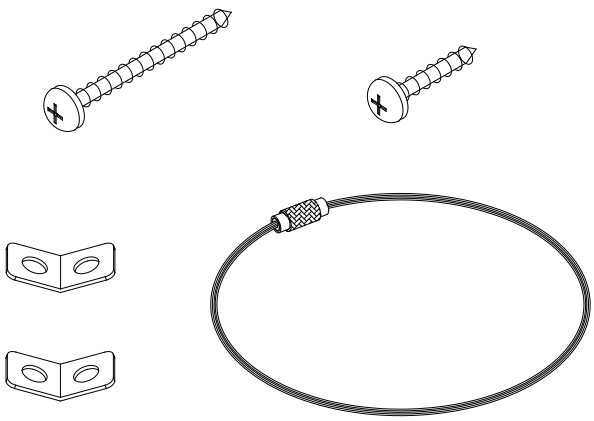
1pc	**1 set**

ASSEMBLY INSTRUCTIONS

Step 1: Leveling Adjustment
Adjust the leveling feet to ensure the cabinet stands evenly on the floor. This is essential for maintaining structural integrity and a clean visual alignment. See Figure 1

Step 2: Anti-Tip Safety Installation
Position the cabinet in its final location, then install the anti-tip kit by securing it to the wall. This step enhances safety and long-term stability. See Figure 2

Step 3: Hinge Adjustment Instructions . See Figure 3

Step 4: The Shelf Panel can be adjusted up and down in it own location as shown below. Consumer need only to unscrew the screw, adjust the Shelf Support Pin either up and down and place the Shelf Panel back onto the Shelf Panel and install the screw again. Illustration as shown below. See Figure 4

ASSEMBLY DIAGRAMS

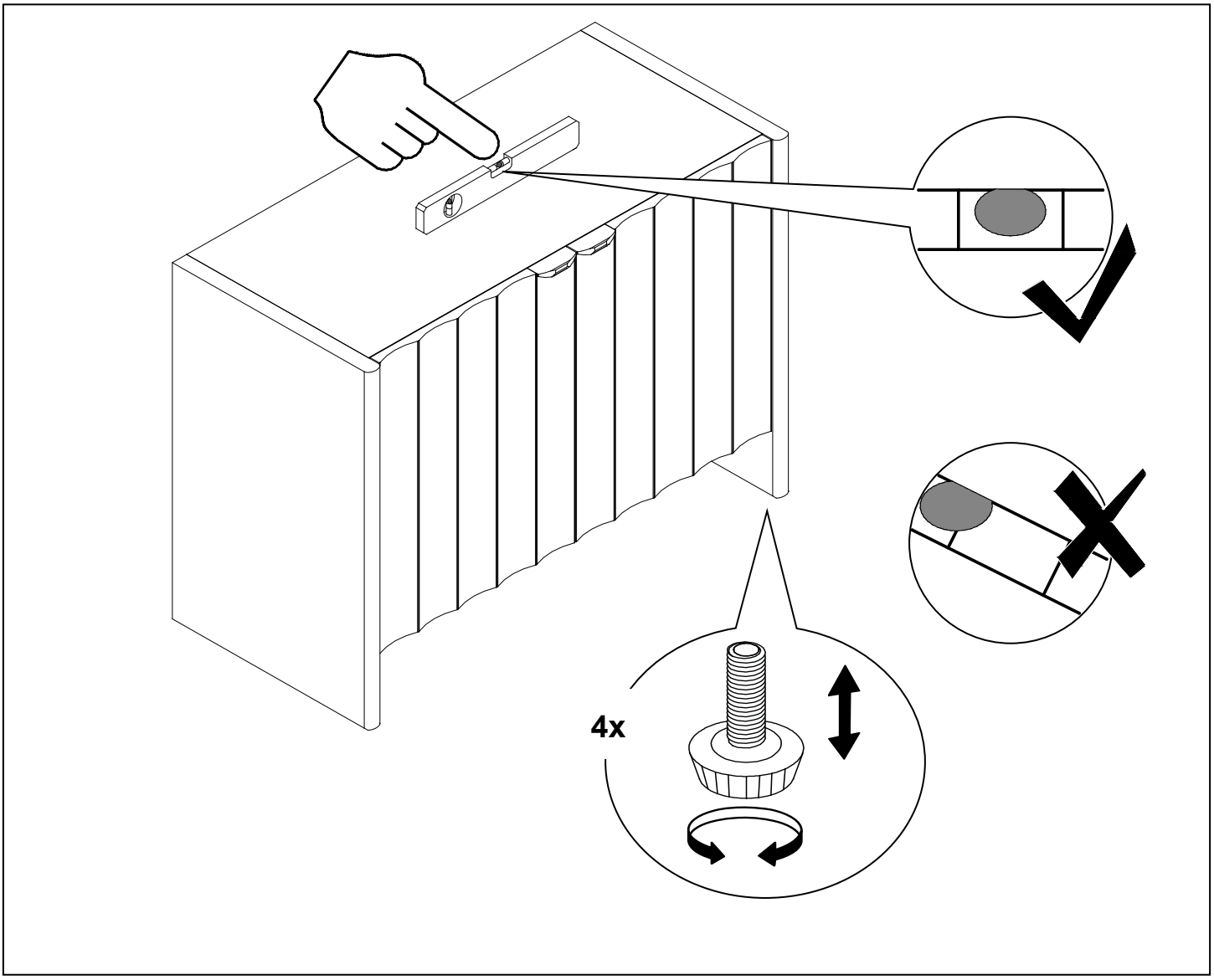

Figure 1

ASSEMBLY DIAGRAMS

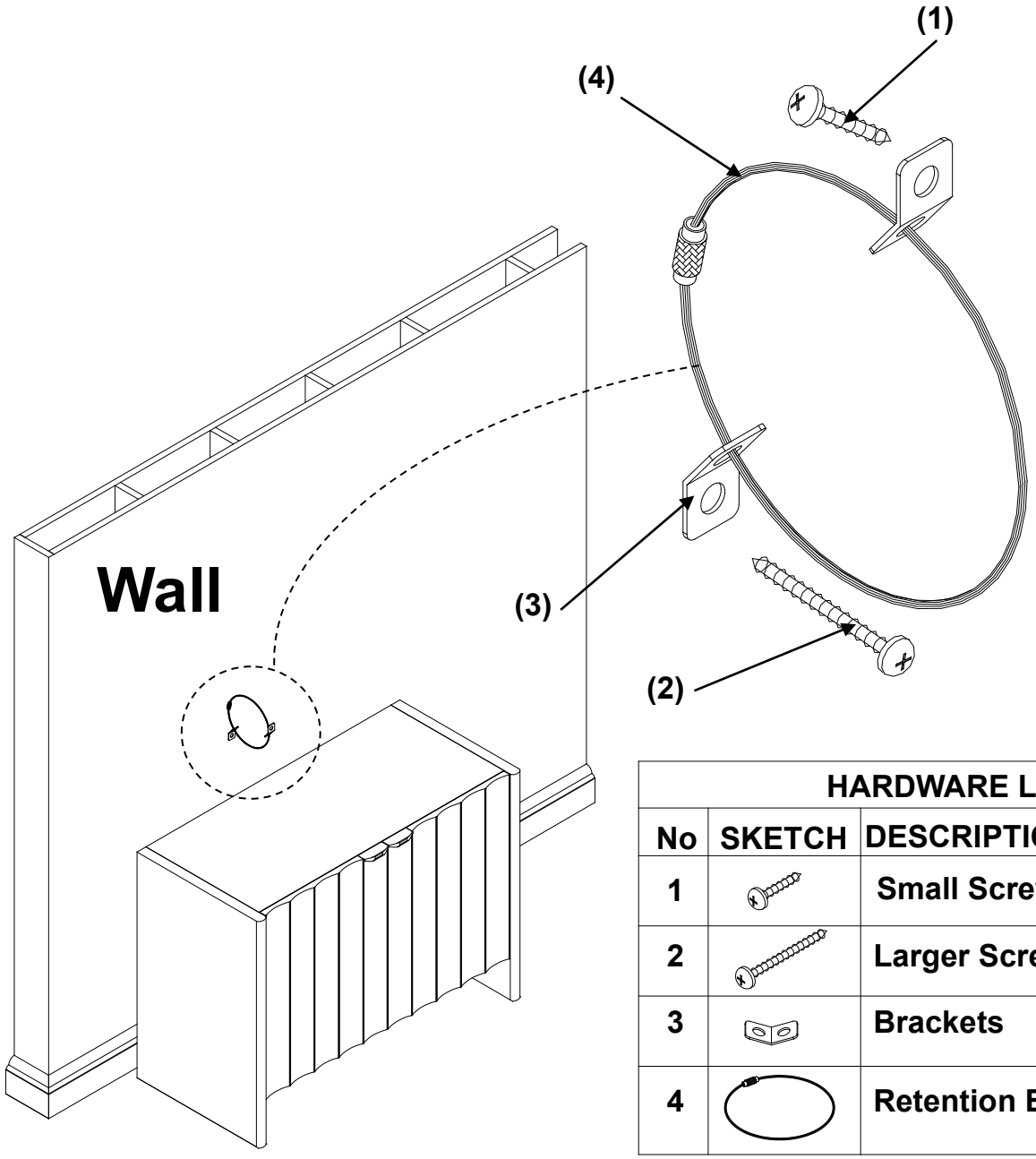

HARDWARE LIST			
No	SKETCH	DESCRIPTION	QTY
1		Small Screw	1pcs
2		Larger Screw	1pcs
3		Brackets	2pcs
4		Retention Belt	1pcs

Figure 2

Cabinet Door Adjustment Instructions

a) If the cabinet door needs to be moved closer to or away from the cabinet frame, locate the side-to-side adjustment screws on the hinge.

b) Use the Phillips screwdriver to adjust these screws and gradually move the door in the desired direction.

ASSEMBLY DIAGRAMS

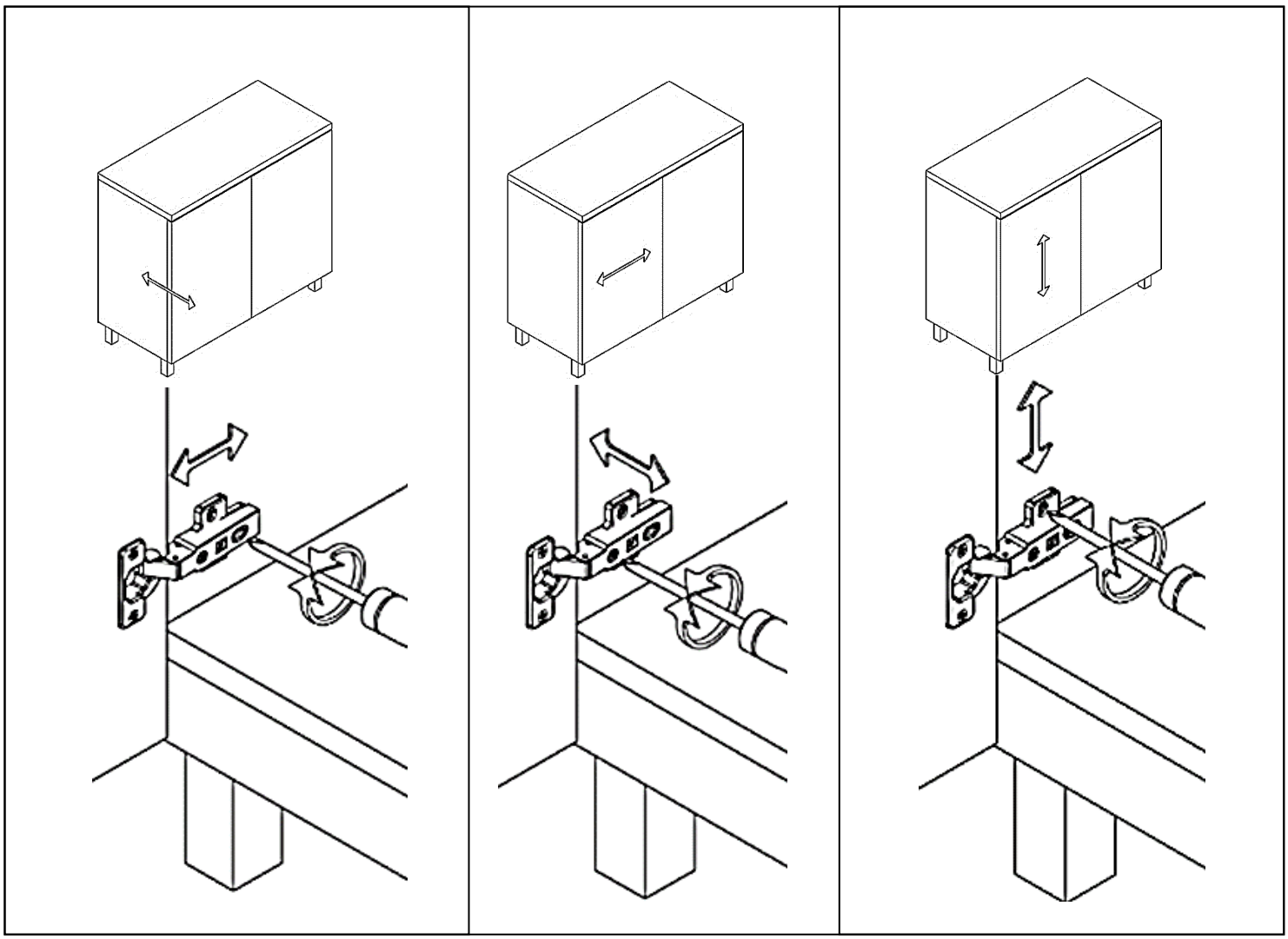

Figure 3

ASSEMBLY DIAGRAMS

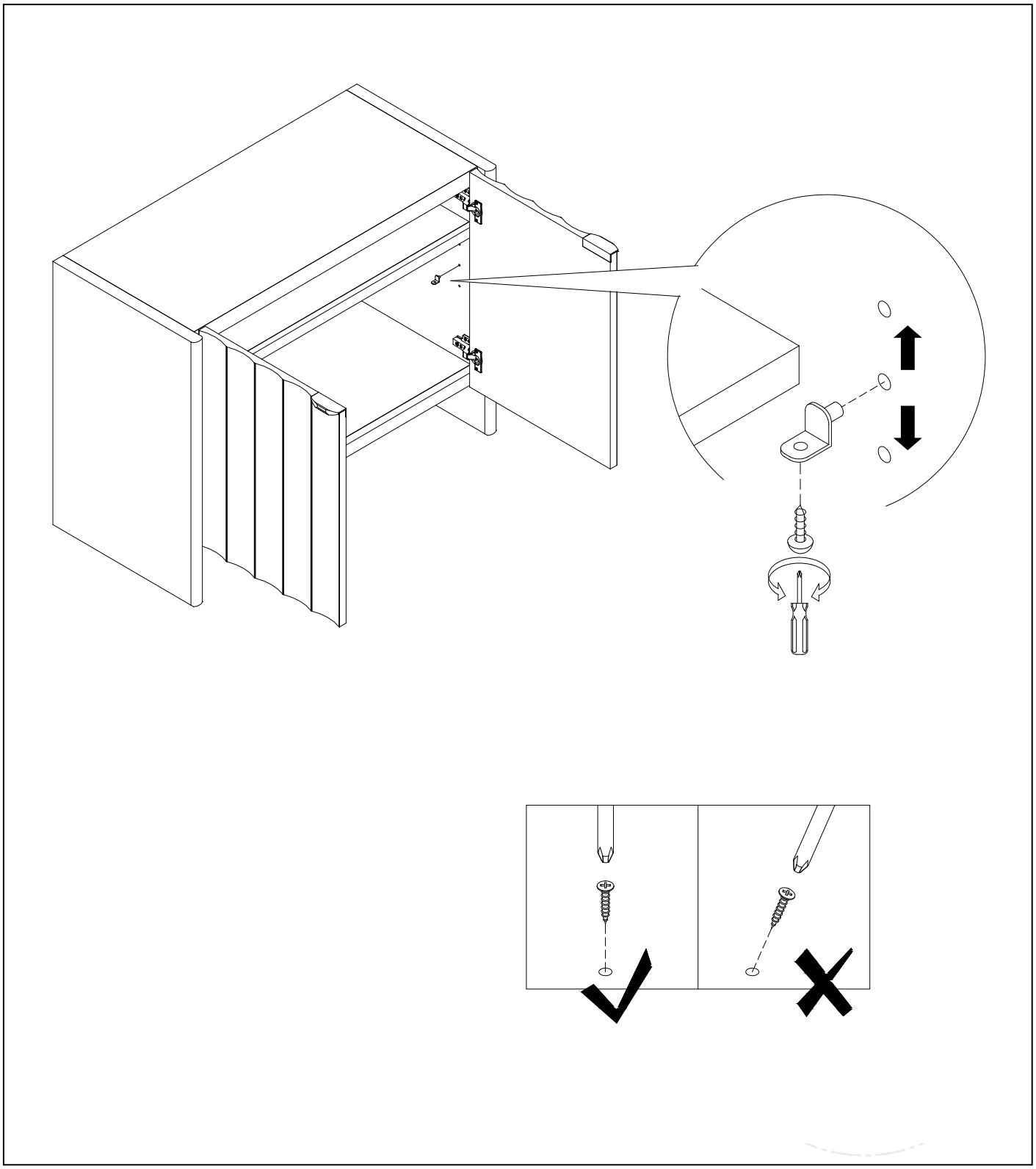

Figure 4

Thank you for purchasing this product !

www.jamieyoung.com

SCAN ME

For more information, please scan the QR code to watch the instruction video.