A—N—D

PIPELINE SERIES
PENDANT 125.2 – 125.5

DESIGNER
CAINE HEINTZMAN

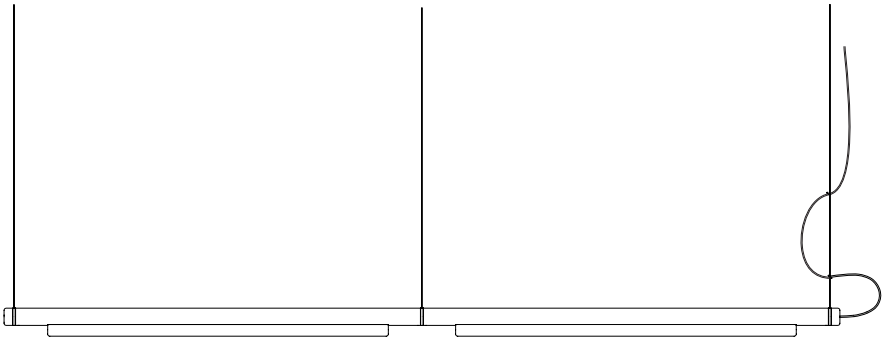

INSTRUCTIONS

SCAN HERE

NORTH AMERICA

c UL us
LISTED

A-N-D.COM

INSTALLATION NOTES

The luminaire is powered by 24V DC.
A constant voltage LED driver is required to operate the luminaire. The LED driver varies, depending on input voltage and dimming requirements.

It is recommended that two people install the Pipeline Pendant; one to gently support the luminaire while the other makes the electrical and mechanical connections to the ceiling.

For questions regarding installation, please email **info@a-n-d.com**



CARE INSTRUCTIONS

Always wear clean gloves when handling the luminaire. Clean painted surfaces with a soft, lint-free cloth. Clean acrylic diffuser with a soft lint-free cloth or an unscented magic eraser pad.

For replacement parts, contact A-N-D directly.



WARNING

The luminaire must be installed by a qualified electrician in a dry indoor location.

Failure to meet any or all of these criteria will not only damage the luminaire, but will void both the warranty and all of its certifications.

COMPONENTS

1. BACKPLATE
2. #8-32 SCREW
3. LED DRIVER
4. WIRE NUT
5. CANOPY
6. CANOPY SCREW
7. STRAIN RELIEF
8. ELECTRICAL CORD
9. CEILING ANCHOR
10. #6 SCREW
11. CABLE GRIPPER
12. SUSPENSION CABLE
13. SET SCREW
14. END CAP ASSEMBLY
15. ACRYLIC DIFFUSER
16. LUMINAIRE
17. CONNECTOR
18. POWER CAP ASSEMBLY

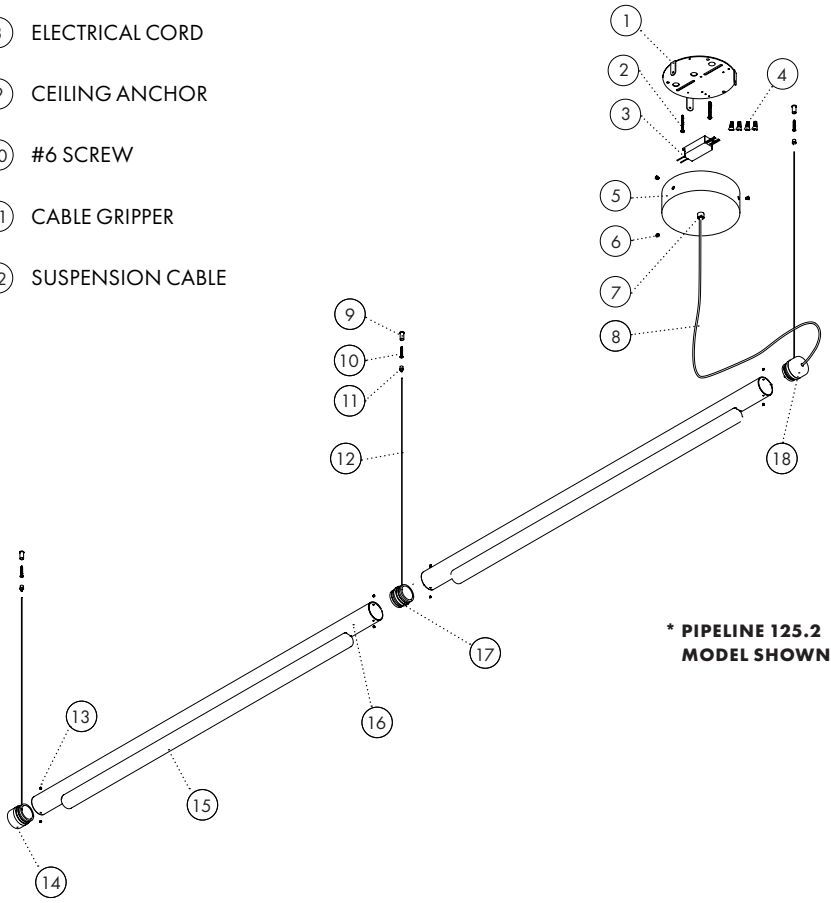

*** PIPELINE 125.2 MODEL SHOWN**

PIPELINE OPTIONS

PIPELINE 125.2

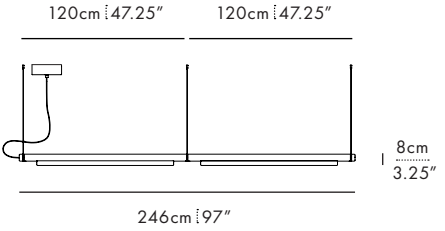

PIPELINE 125.3

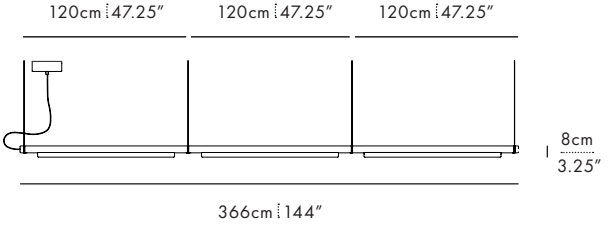

PIPELINE 125.4

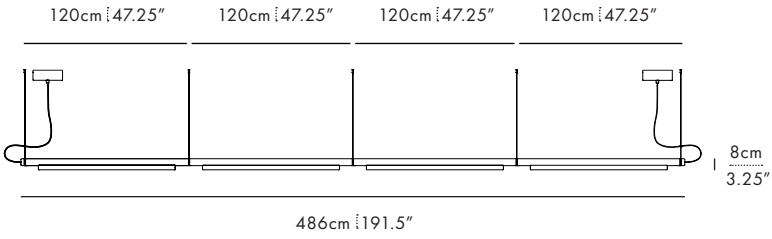

PIPELINE 125.5

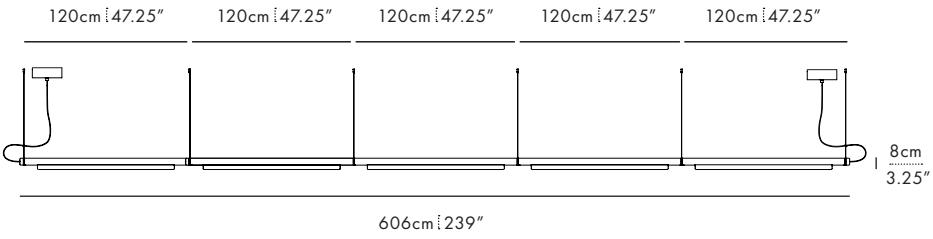

LED DRIVER OPTIONS

The Pipeline Pendant LED driver varies depending on dimming requirements and input voltage.

Use the ordering code to determine the driver selected:
ie. PIP-40-P-BK-BK-27-010-277

DIMMING — INPUT VOLTAGE

PHASE CUT DIMMING (PC)

M30 SERIES - ES POWER
INPUT: 120VAC
OUTPUT: 24VDC,40W
L x W x H: 111 x 44 x 32

M-40 SERIES - ES POWER
INPUT: 120VAC
OUTPUT: 24VDC,75W
L x W x H: 140 x 49 x 32



0–10 + PWM DIMMING (010)

Q40-P SERIES - ES POWER
INPUT: 110-277VAC
OUTPUT: 24VDC,40W
L x W x H: 111 x 44 x 32

Q68-P SERIES - ES POWER
INPUT: 110-277VAC
OUTPUT: 24VDC,68W
L x W x H: 140 x 49 x 32

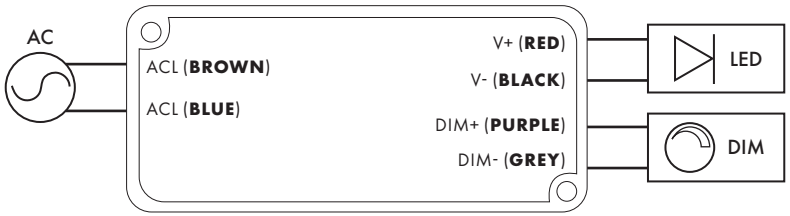

PREPARATION

STEP 1

Determine the drop height of the fixture and trim excess cable.

Electrical cord length:
Add an extra 45cm/18" to the drop height. This allows for slack and electrical connections inside the canopy.

⚠ **Caution!**
The electrical cord must not bear any weight.

Suspension cable length:
Do not trim until **STEP 4.**

This allows for any required adjustments.

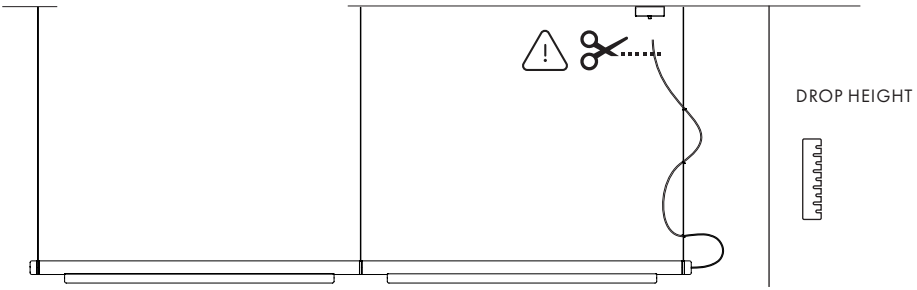

*** PIPELINE 125.2 MODEL SHOWN**

INSTALLATION

STEP 2

Mark the suspension anchor points on the ceiling.

If required, a substrate specific anchor is to be provided by installer. Ex: drywall anchors

Use the model specific dimensions on **PAGE 4** to determine the anchor spacing.

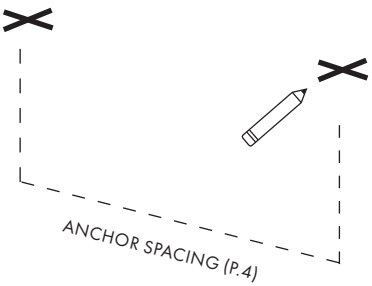

STEP 3

Install the suspension cable anchors on ceiling.

Use the provided #6 screws.

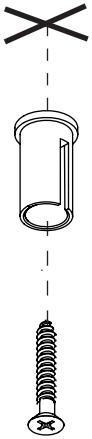

STEP 4

Hang the suspension cables and connectors.

Attach the suspension cable grippers to the ceiling anchors by threading them clockwise.

Align the suspension cable so that it exits the slot in the side of the ceiling anchor.

To adjust the position of the cable in the cable gripper, push the center pin inwards. This releases the auto-locking mechanism on the cable.

PIPELINE 125.2 + 125. 3

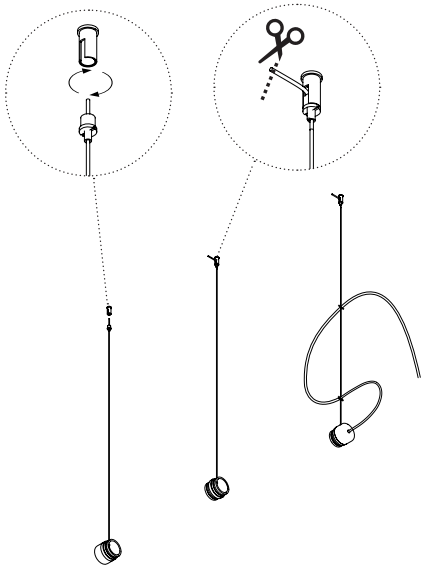

PIPELINE 125.4 + 125.5

Luminaires are powered from both ends. Requires two canopies and two electrical cords.

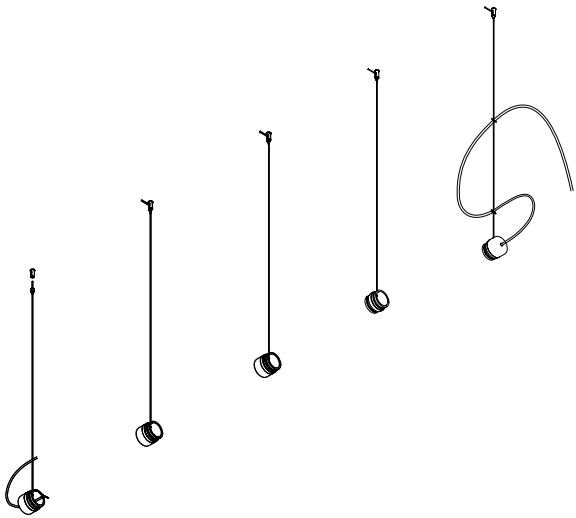

INSTALLATION

STEP 5

Suspend the luminaire sections and connect internal wiring.

Raise one section at a time and repeat for all sections.

Depending on the model, there will be varying quantities of power cap assemblies, connectors, suspension cables and end cap assemblies.

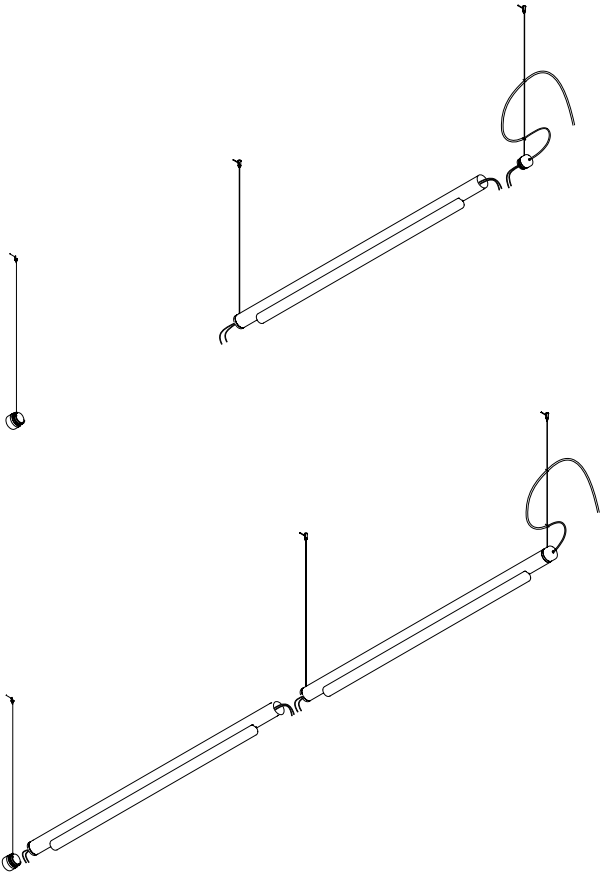

*** PIPELINE 125.2 MODEL SHOWN**

5A

Connect the internal electrical wires:

Red wire to **red wire** (V+)

Black wire to **black wire** (V-)

Push the electrical wires and connectors inside the luminaire.

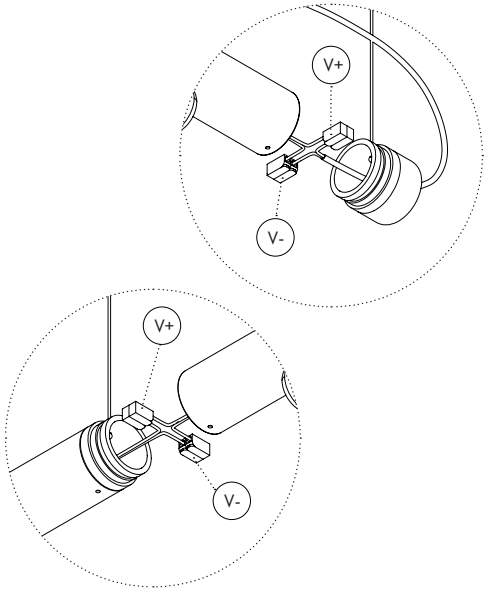

5B

Connect and close the luminaire sections.

Use the provided set screws and hex key.

Tighten the setscrews until the sections are aligned and secure.

⚠ **Caution!**
Overtightening the set screws will cause misalignment and possibly damage the luminaire.

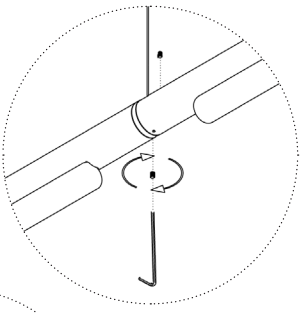

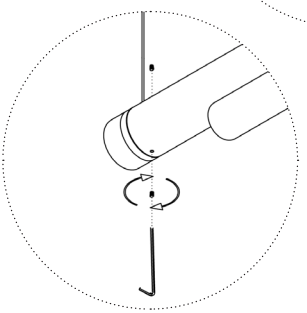

INSTALLATION

125.4, 125.5

The internal wiring is split into two isolated circuits.

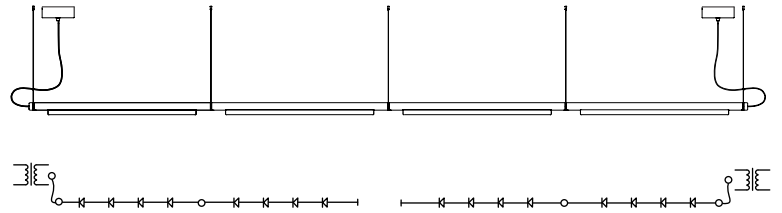

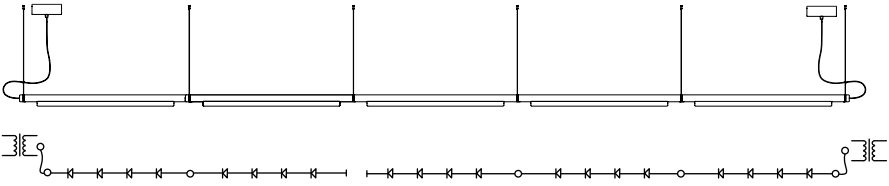

STEP 6

Mount the backplate to the junction box and pull the wires through.

Use the provided #8-32 screws.

⚠ **Caution!**
Ensure that the power is disconnected at the breaker.

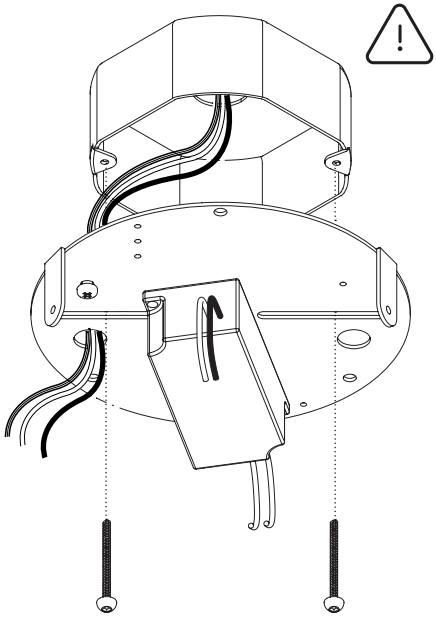

STEP 7

Connect the primary circuit on the LED driver to input power. Connect ground.

Black/brown wire = **Line** (L)

White/blue wire = **Neutral** (N)

Green screw = **Ground** (G)

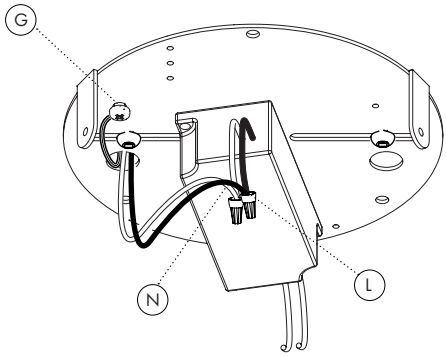

REFER TO PAGE 5: DRIVER OPTIONS FOR MORE DETAILS

INSTALLATION

STEP 8

Connect the luminaire to secondary circuit on LED driver.

Dashed line = **Positive** (V+)

Black = **Negative** (V-)

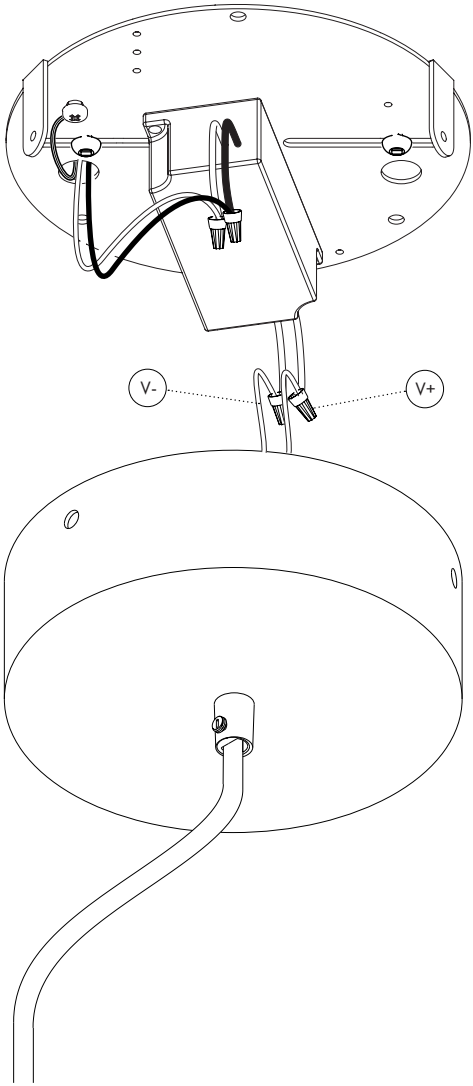

REFER TO PAGE 5: DRIVER OPTIONS FOR MORE DETAILS

STEP 9

Attach the canopy to the backplate and secure the electrical cord.

Use the provided colour matched machine screws to attach the canopy.

Adjust the postion of the electrical cord then secure it by tightening the screw on the strain relief until it gently holds it in place.

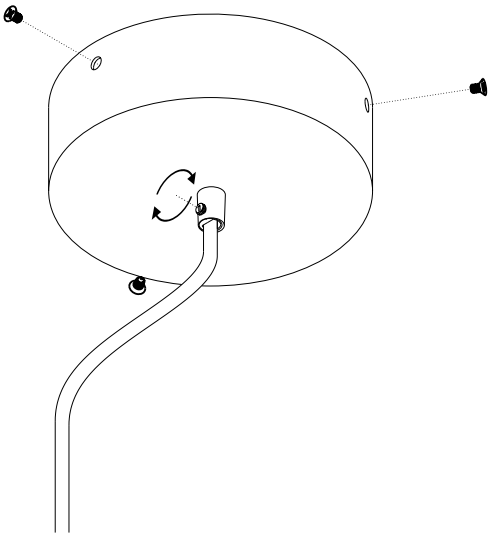

STEP 10

Adjust the position of the electrical cord.

Use the O-rings to gently sweep the electrical cord along the suspension cable.

This is a visual element of the Pipeline luminaire.

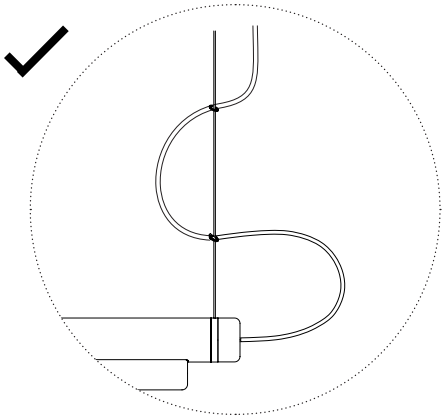

A—N—D

For support, please contact:
info@a-n-d.com
+1 604 563 6938

1951 Franklin St,
Vancouver, BC
Canada V5L 0C7

A-N-D.COM