PIPELINE V2 125.3 — P

A—N—D

PENDANT

Designed by Caine Heintzman — 2013

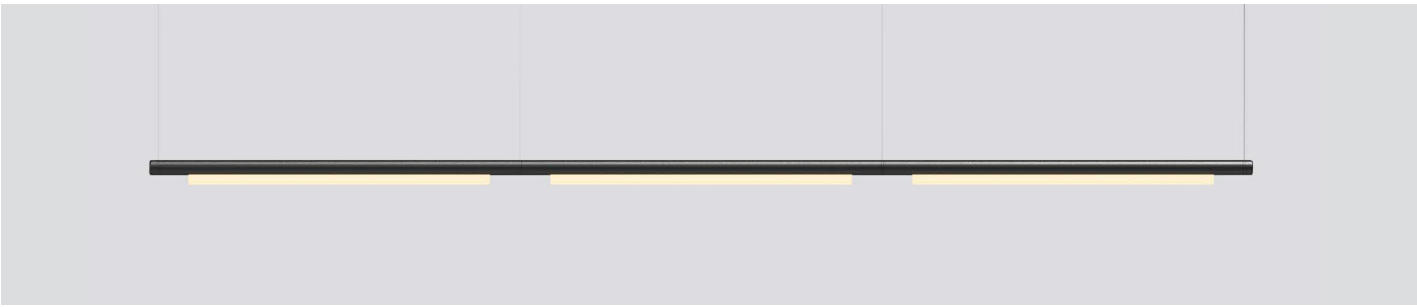

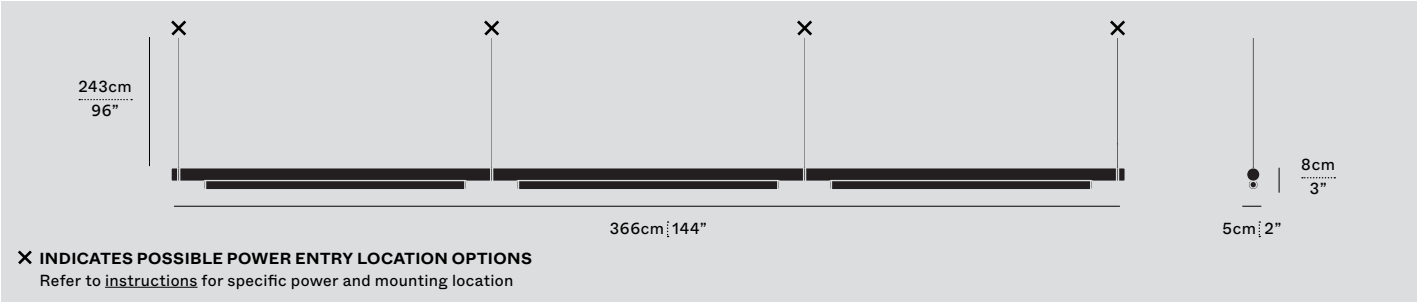

✕ INDICATES POSSIBLE POWER ENTRY LOCATION OPTIONS
Refer to instructions for specific power and mounting location

PIP-V2-125.3-P-BK-27-ELV-120 — A-N-D.COM

TYPE
Pendant

DIMENSIONS
366cm x 8cm x 5cm / 144” x 3” x 2”

Adjustable drop length
243cm / 96” –Custom length available

MATERIALS
Aluminum, Acrylic

MANUFACTURED
Canada

3D MODELS ON A-N-D.COM
REVIT, IES, DWG, 3DS, Rhino, Sketchup

CERTIFICATIONS
Application: dry indoor location only

TECHNICAL INFORMATION

Input Voltage
110–120V, 220–240V, 110–277V

Lamping
Integral 66W 24V DC LED
CRI 90+, 50,000 hours

Lumens
5319 lumens delivered

Controls
Phase dimming, 0-10V, DALI

COLOUR TEMPERATURE OPTIONS

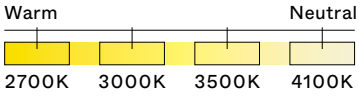

DIM TO WARM



CANOPY OPTIONS

Standard
Ø 20cm x 5cm / Ø 8” x 2” encolusure (1), monopoint suspension, surface mount driver (1), anchor (3) and cable swag add-on included (1)

*Refer to Accessories for Micro Canopy, Remote Power Supply, and other options

FINISHES



For custom finishes, please inquire.

SERIES	SIZE	TYPE	BODY FINISH	END CAP/JOINER	CCT	PS	VOLTAGE IN
PIP-V2	125.3	P	☐ BK (BLACK) ☐ WH (WHITE) ☐ RA (RAW) ☐ BR (BRASS) ☐ CP (COPPER) ☐ CH (CHROME)	☐ BK (BLACK) ☐ WH (WHITE) ☐ BR (BRASS) ☐ CP (COPPER) ☐ CH (CHROME)	☐ 27 (2700K) ☐ 30 (3000K) ☐ 35 (3500K) ☐ 41 (4100K) ☐ DW (DIM TO WARM)	☐ ELV ☐ 010 ☐ DAL	☐ 120 ☐ 230 ☐ 277*

*277 only available with 010

Modified: 03/17/26
©2026 ANDSTUDIO DESIGNS INC.
All Rights Reserved.

1951 Franklin St
Vancouver, B.C.
Canada V5L 0C7

Sankt Peders Stræde
45B, 1453 Copenhagen
Denmark

+1 604 563 6938
INFO@A-N-D.COM
A-N-D.COM