Vitis 5

13089 rB

Low Voltage Input

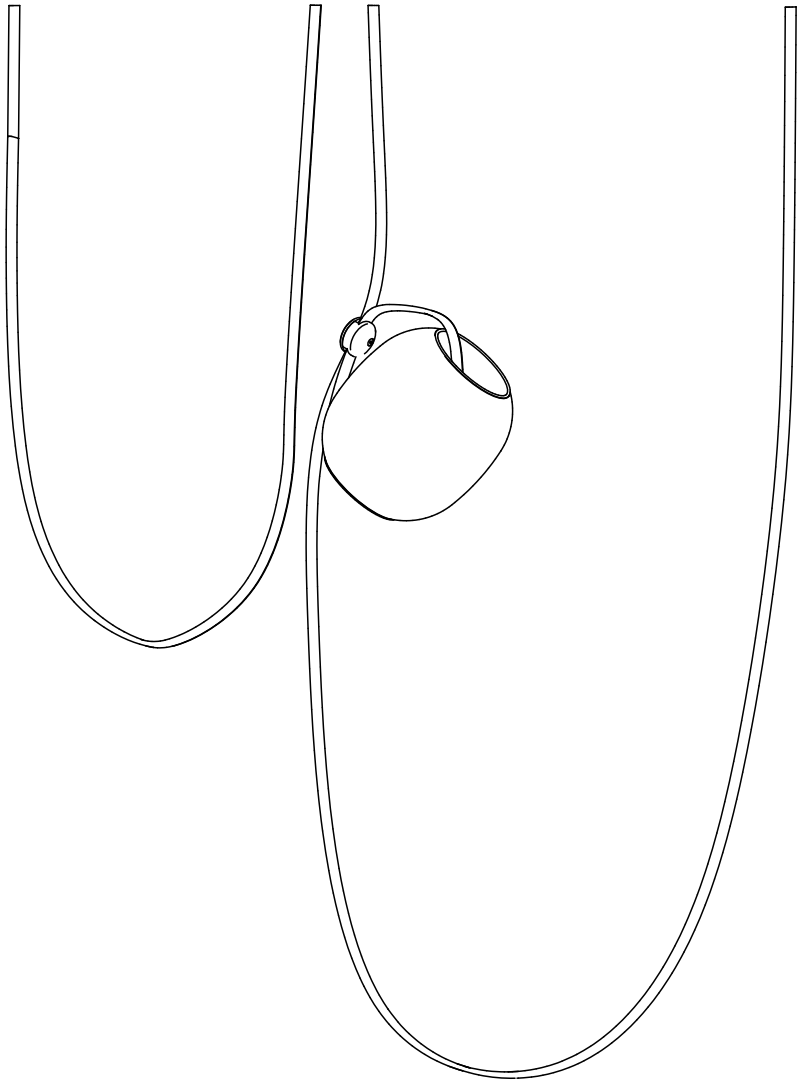

CAUTION:

Before starting, turn off power at main circuit panel.

ADVERTENCIA:

Antes de comenzar la instalación, apague la corriente en el tablero principal.

ATTENTION:

Coupez l'alimentation avant de proceder à l'installation.

Calling for backup? Scan above to contact our team.

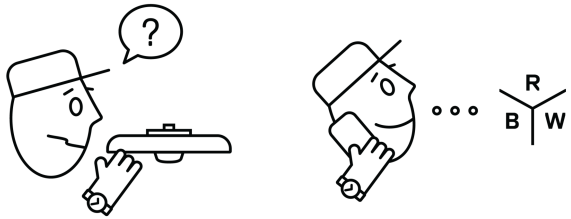

www.RBW.com
+1 212 388 1621
support@RBW.com
© RBW Studio LLC, 2013, 2020

* BOM for Item 2 on page 3

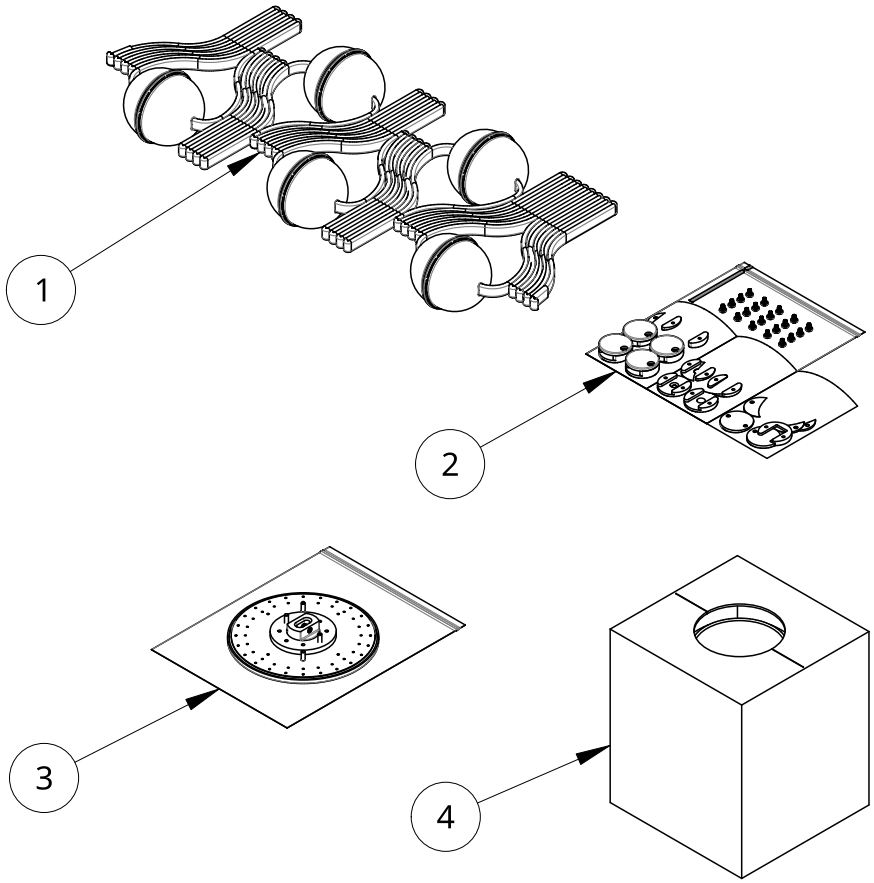

Item	Qty	Part number	Description
1	1	13014	Vitis 5 Module Assembly
2	1	11663	Vitis 5 Cord Grip Components
3	1	11660	Vitis Canopy Packaging
4	5	13002	Vitis Glass Box

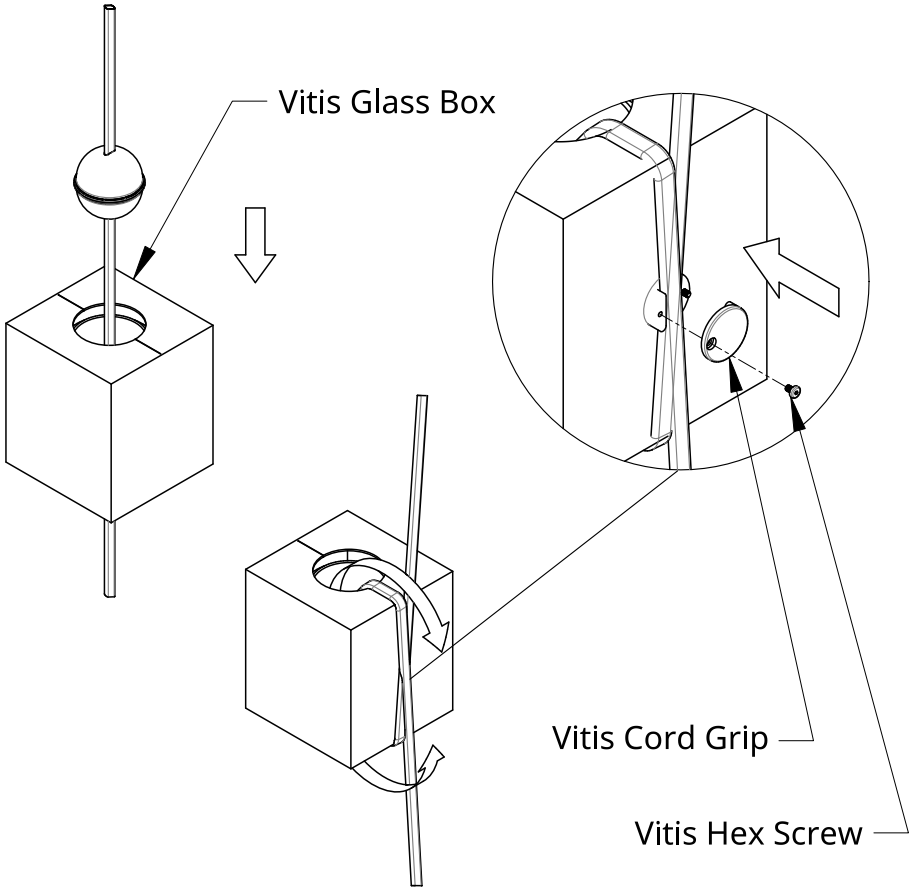

Installation - Glass Assembly in Box

1. Remove perforated circles from Glass Assembly Box.
2. Starting from one end, feed Vitis Power Cord through Glass Assembly in Box until Glass is centered over Module Assembly.
3. Fold Vitis Power Cord sections over edge of Glass Box and overlap Cords.
4. Use 2 Vitis Cord Grip parts and 2 Vitis Hex Screws to secure overlapping Cords.
5. Before fully securing Cord Grips, pull Power Cord's tight to the Glass Box.

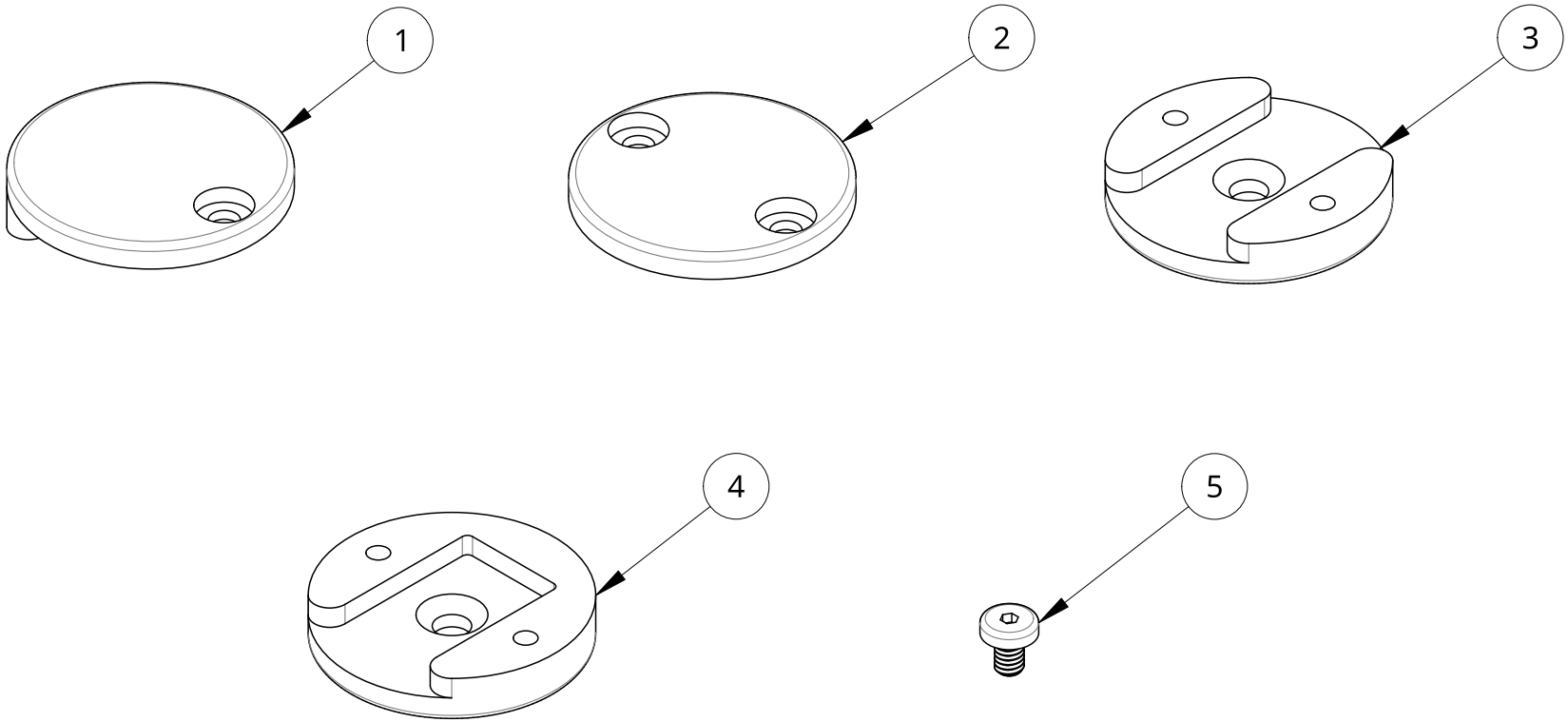

Item	Qty	Part number	Description
1	10	12004-XXXX	Vitis Cord Grip
2	6	12009-XXXX	Vitis Cord Grip Ceiling Cover
3	5	12005-XXXX	Vitis Cord Grip Ceiling
4	1	12001-XXXX	Vitis Cord Grip End
5	22	11644-XXXX	Vitis Hex Screw

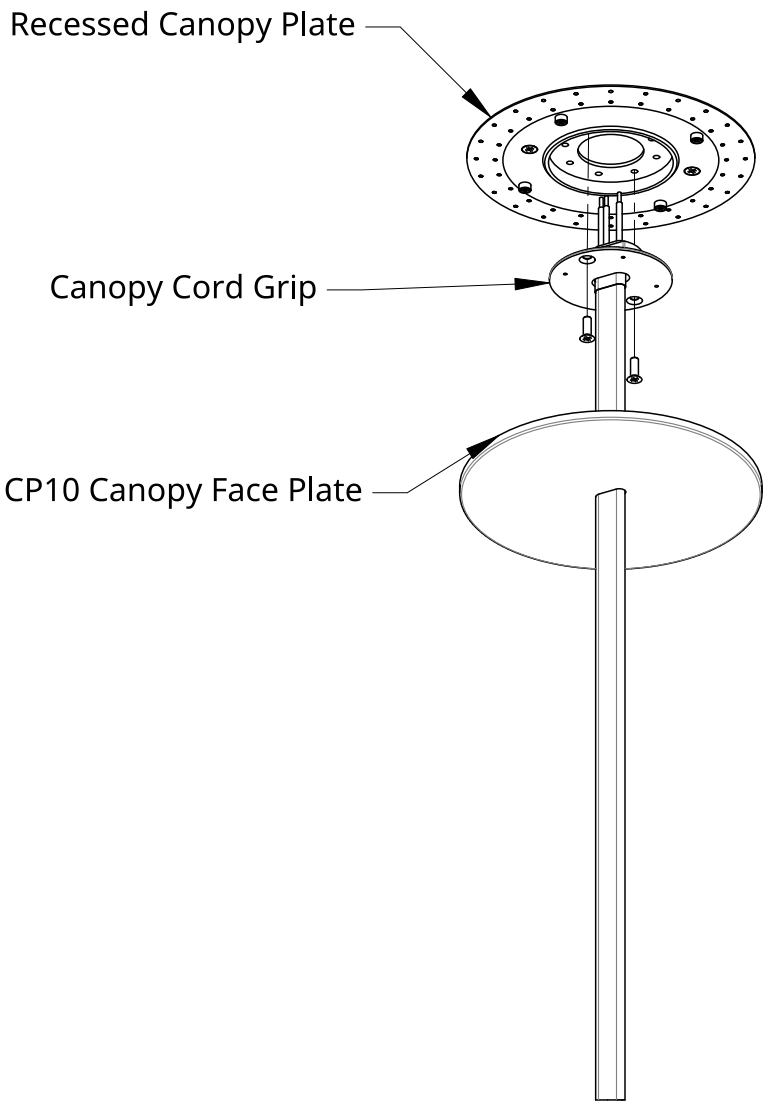

Installation - Canopy

1. Refer to Canopy Instructions Sheet.

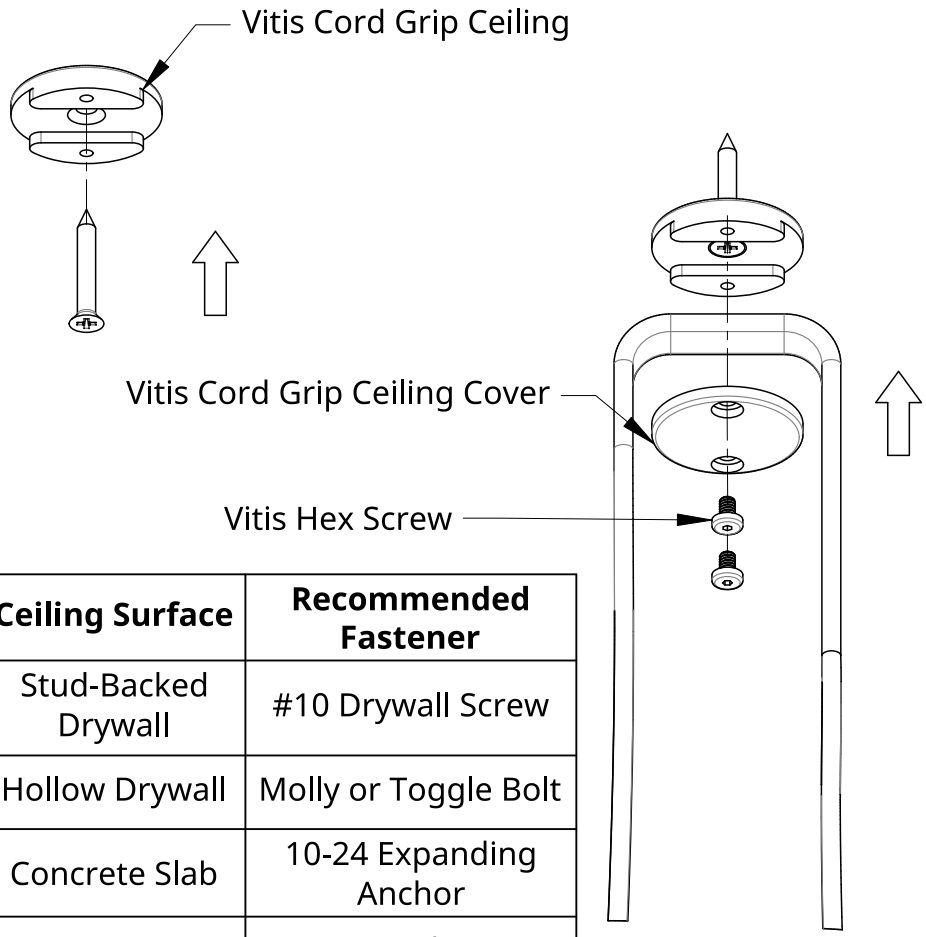

Ceiling Surface	Recommended Fastener
Stud-Backed Drywall	#10 Drywall Screw
Hollow Drywall	Molly or Toggle Bolt
Concrete Slab	10-24 Expanding Anchor
Wood	#10 Wood Screw

Installation - Cord Grip

1. Depending on your mounting surface, use an appropriate fastener to secure Vitis Cord Grip Ceiling to desired location.
2. Place Vitis Cord in Cord Grip channel and place Cord Grip Ceiling Cover on top.
3. Using 2 Vitis Hex Screws, fasten the two Cord Grip pieces together to secure the Vitis Cord.
4. Repeat this process until desired configuration is achieved.

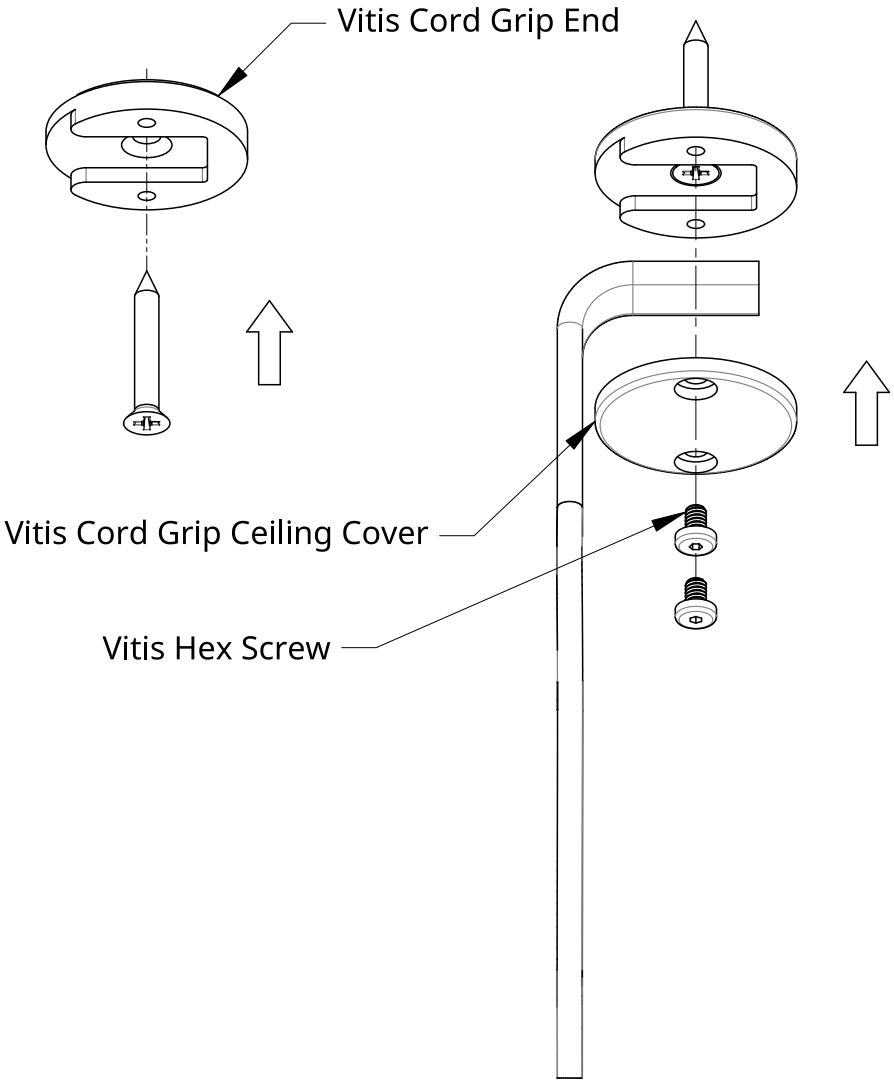

Installation - Cord Grip End

1. Repeat previous Cord Grip steps.
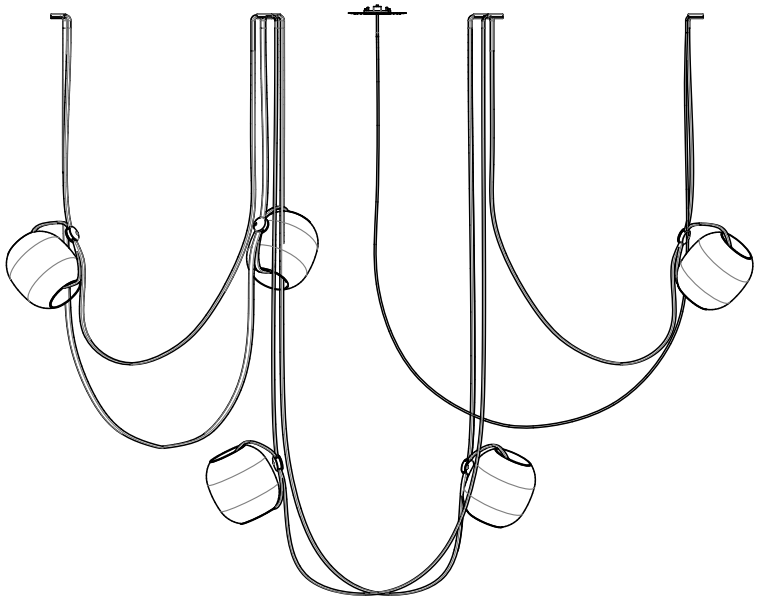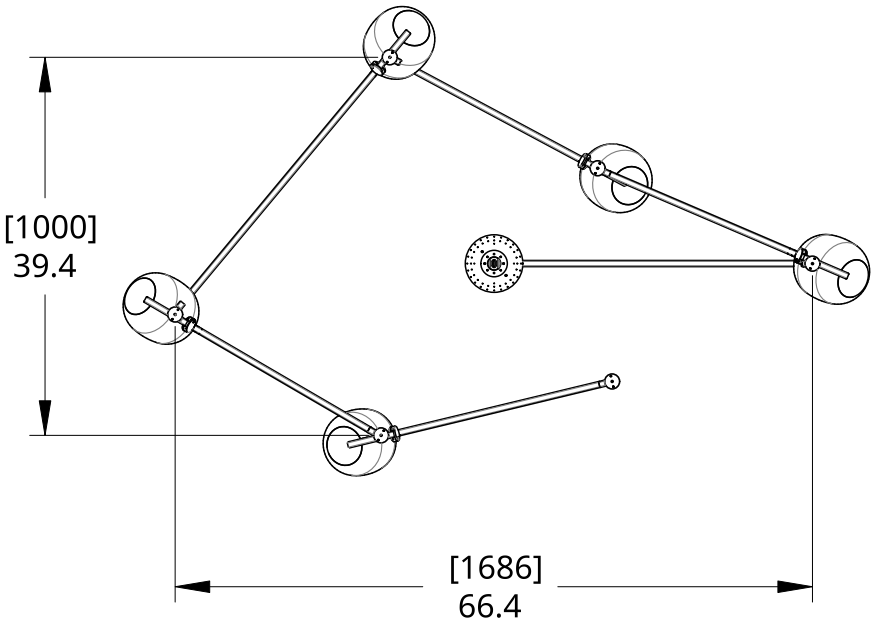
Refer to Vitis configuration drawings for all Vitis orientations.