Recessed/ Mud-In Canopy

13092 rA

Vitis Cord

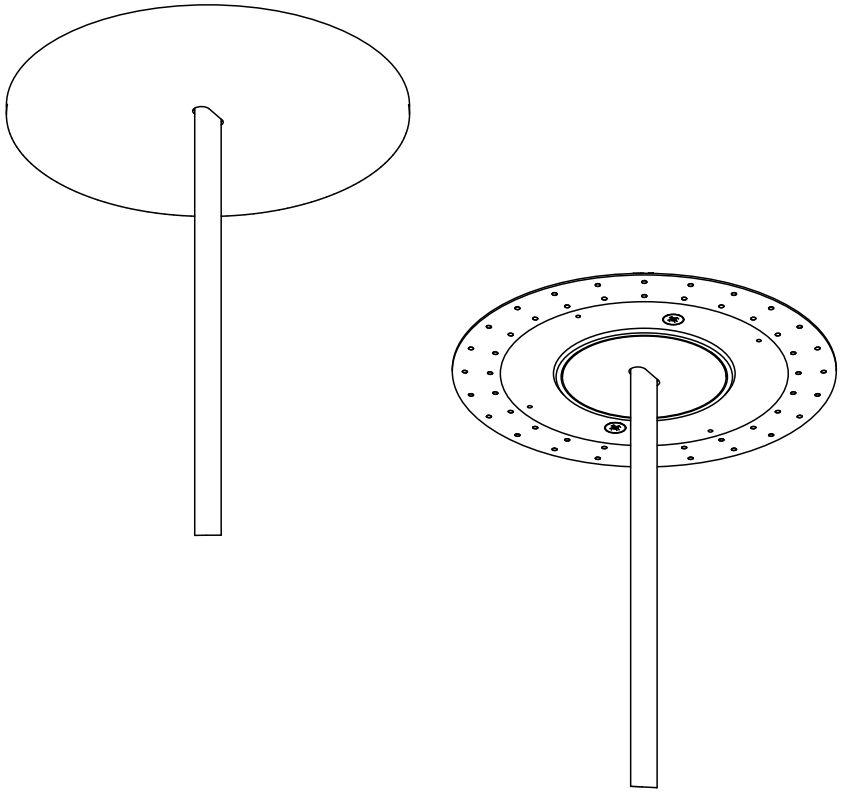

CAUTION:

Before starting, turn off power at main circuit panel.

ADVERTENCIA:

Antes de comenzar la instalación, apague la corriente en el tablero principal.

ATTENTION:

Coupez l'alimentation avant de proceder à l'installation.

Calling for backup? Scan above to contact our team.

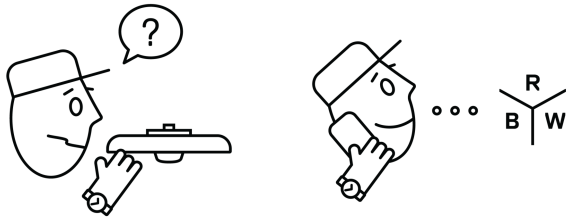

www.RBW.com
+1 212 388 0399
support@RBW.com
© RBW Studio LLC, 2013, 2020

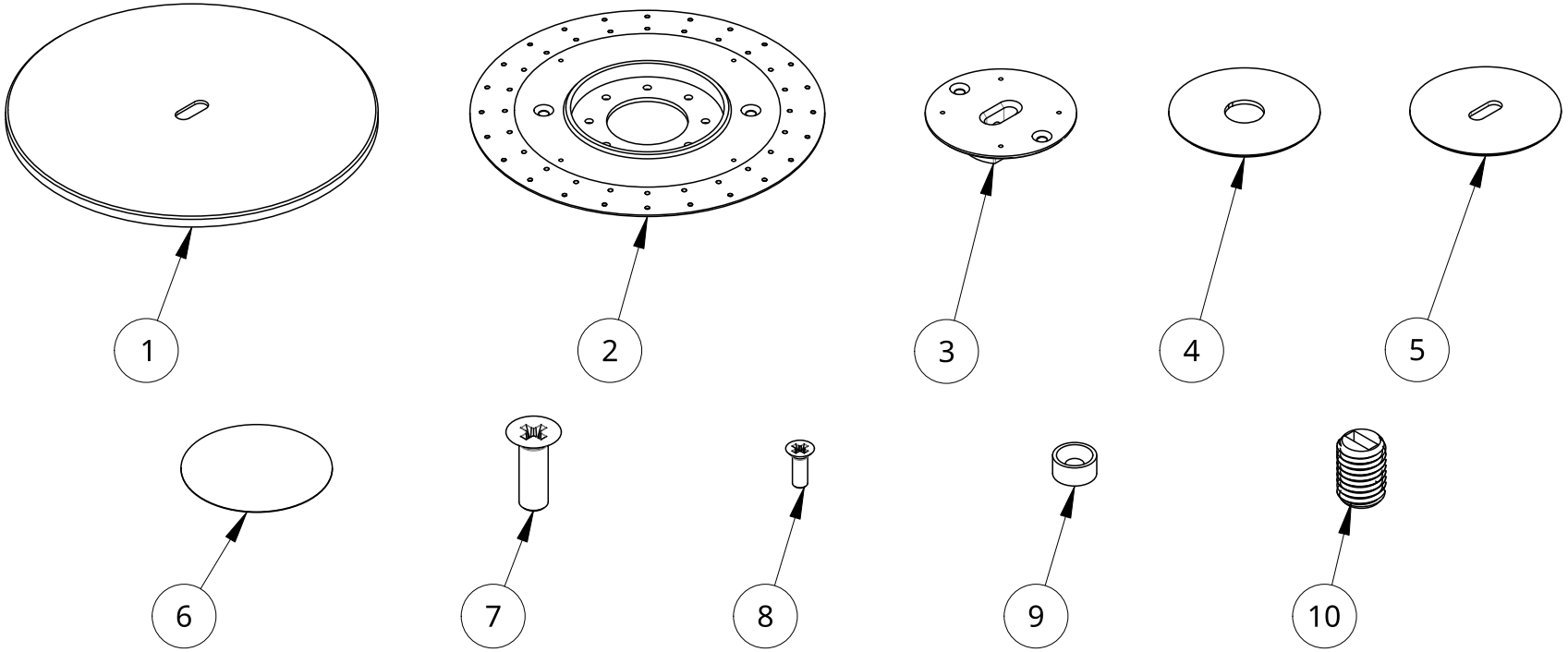

Item	Qty	Part number	Description
1	1	11038	Vitis Canopy Face Plate
2	1	11030	Recessed Canopy Plate
3	1	11036	Vitis Canopy Cord Grip
4	1	12235	Recessed Hole Cover
5	1	11037	Recessed Canopy Cover
6	1	15712	Sticker - Puncture to Remove Cover
7	4	90471A270	Flat countersunk head (100) machine screw #8-32 x 0.5 Steel
8	4	91771A104	Flat countersunk head (82) machine screw #2-56 x 0.25 SS
9	4	R422CS-S-N52	Magnet 1/8" Thick with Countersunk Hole for #2 screw
10	1	12079	M7 x 10mm Nylon Set Screw

* For Mud-In Instructions refer to Page 4

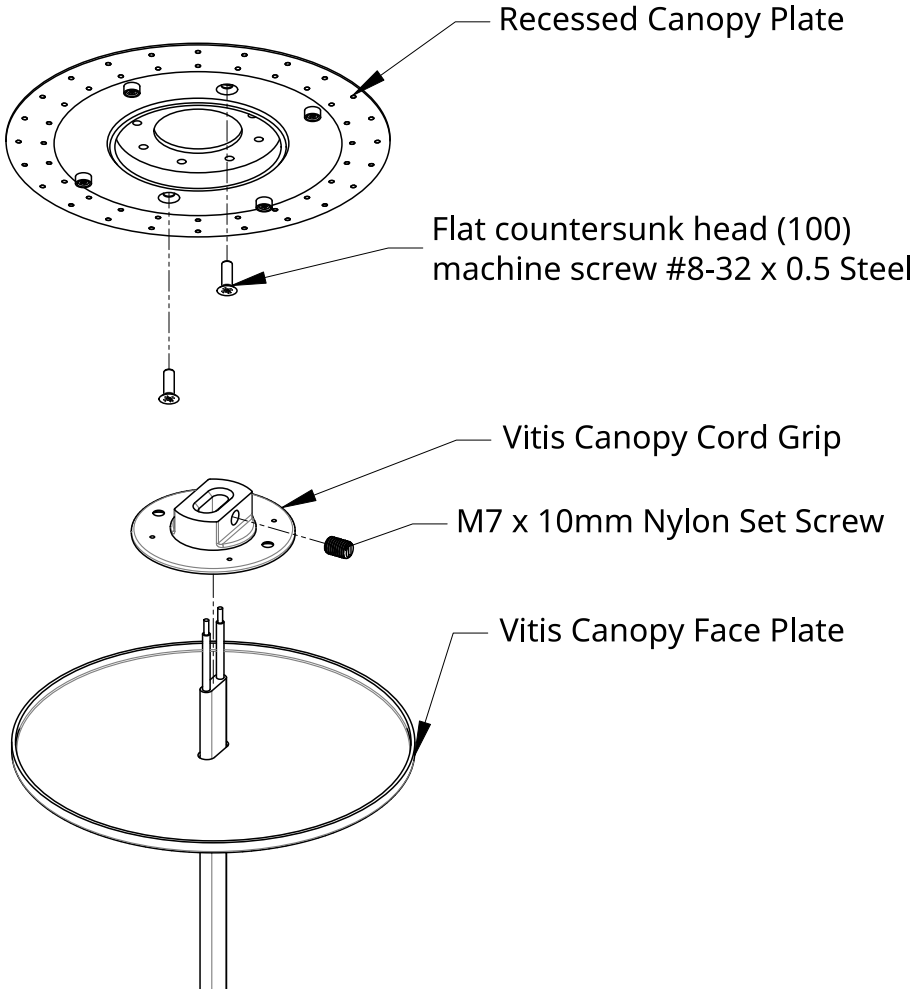

Installation - Recessed Canopy Plate & Cord Grip

1. Raise Recessed Canopy Plate up to desired mounting location.
2. Secure with two #8-32 Flat head screws.
3. Slide Canopy Face Plate over Power Cord.
4. Secure Power Cord in Canopy Cord Grip with M7 Nylon Set Screw.

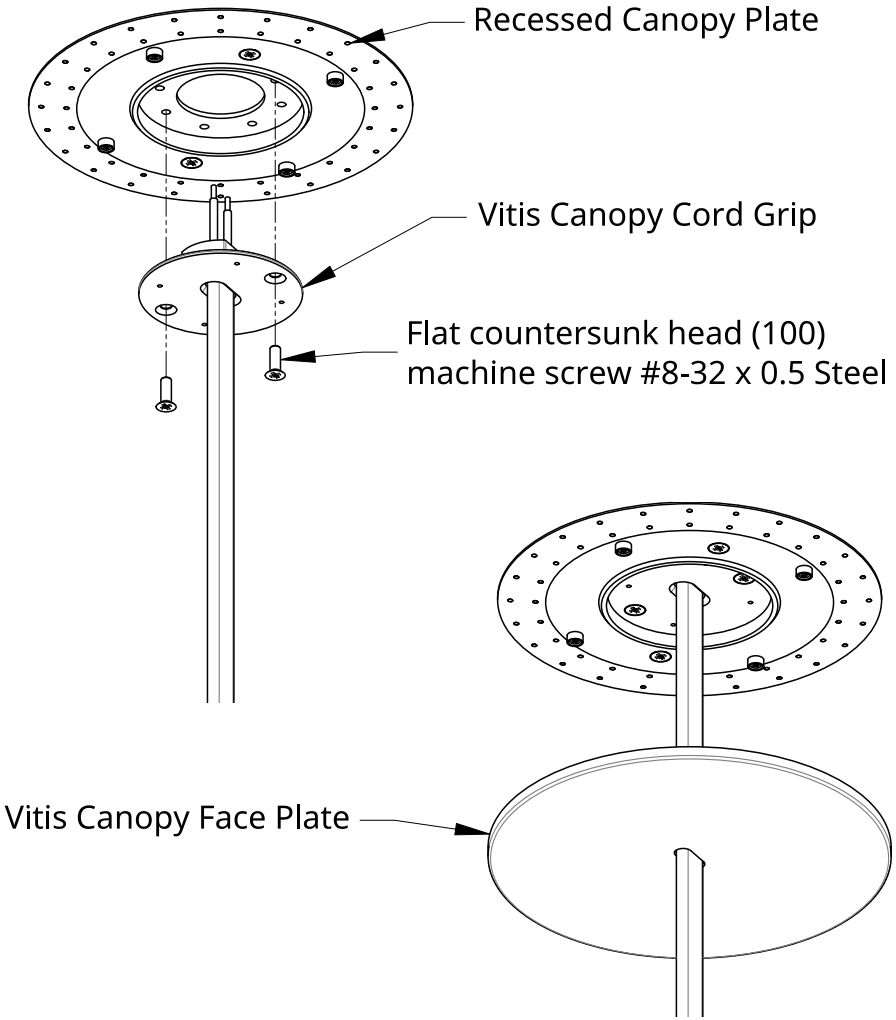

Installation - Canopy Face Plate

6. Raise Canopy Cord Grip to Recessed Canopy Plate and secure with #8-32 Flat head screws.
7. Raise Canopy Face Plate to Recessed Canopy Plate so magnets secure the Face Plate.

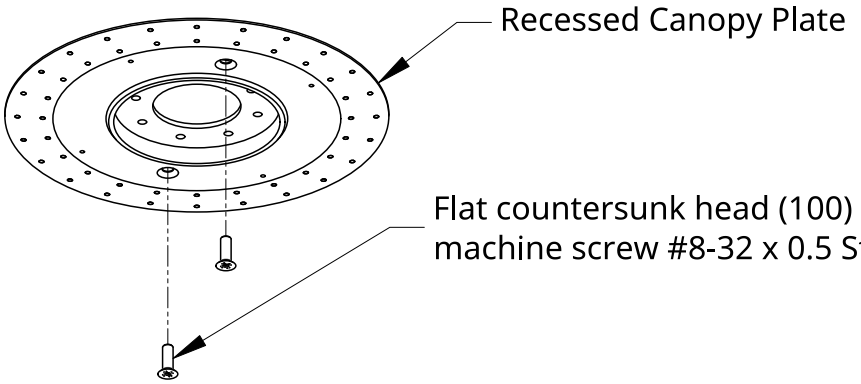

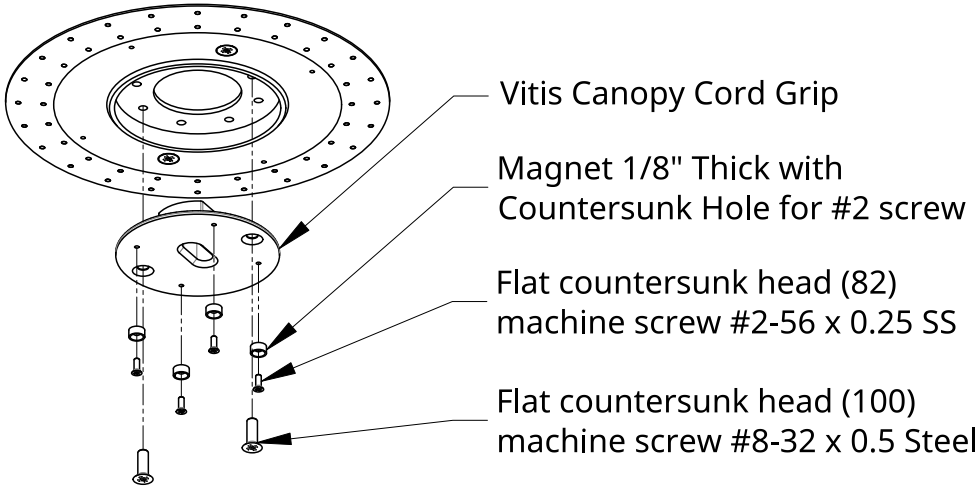

Installation - Recessed Canopy Plate & Cord Grip

1. Raise Recessed Canopy Plate up to desired mounting location.
2. Secure with two #8-32 Flat head screws.
3. Fasten #2 Magnets to Cord Grip with #2-56 Flat head Screws.
4. Secure Cord Grip to Recessed Canopy Plate with #8-32 Flat Head Screws.

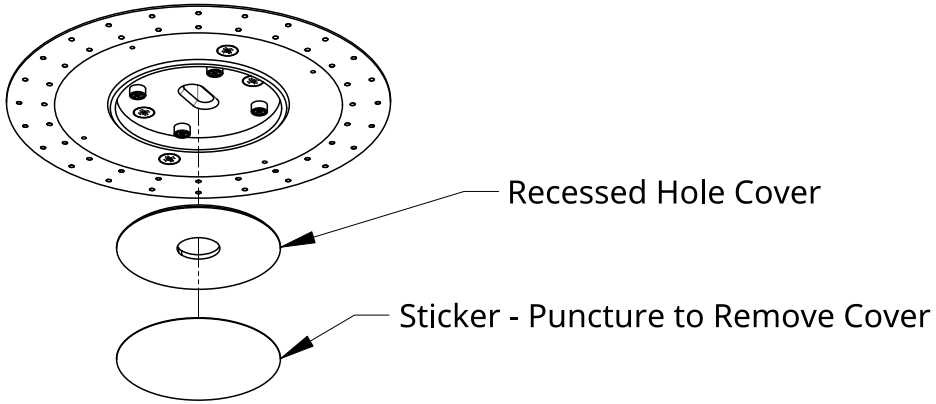

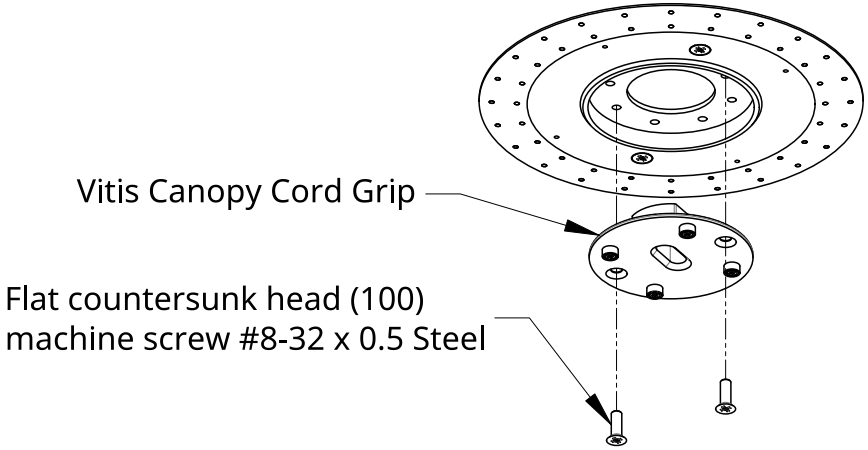

Installation - Hole Cover

5. Raise Hole Cover to Recessed Canopy Plate so magnets secure the Hole Cover.
6. Place Sticker concentrically onto Hole Cover.
7. Apply Spackle to cover Recessed Canopy Plate.
8. Once Spackle is dried, sanded smooth and painted, puncture center of Sticker to remove Hole Cover.
9. Remove #8-32 Screws to remove Cord Grip assembly.

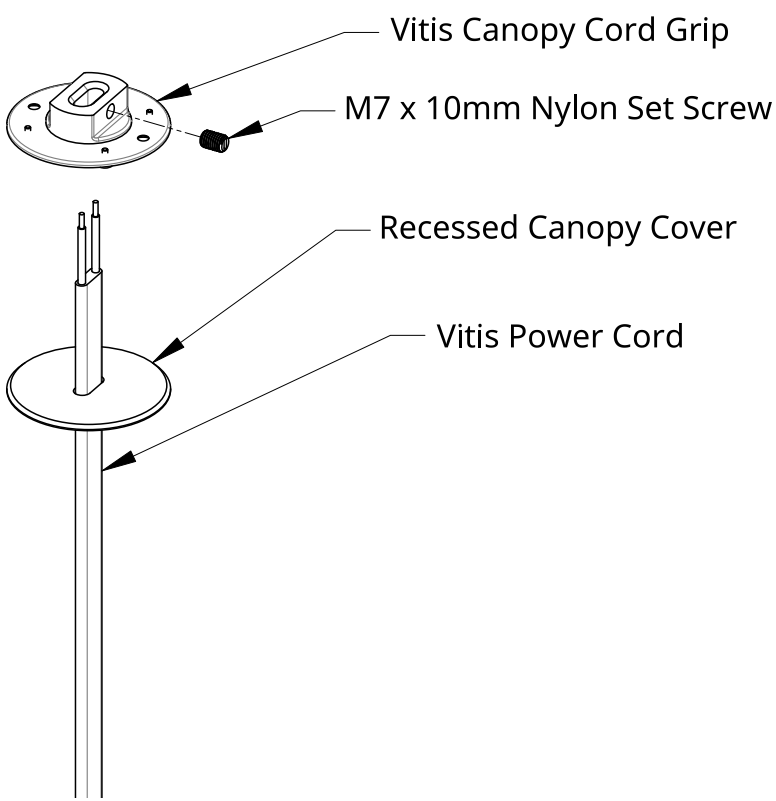

Installation - Cord Grip

10. Slide Canopy Cover over Vitis Power Cord.
11. Secure Power Cord in Canopy Cord Grip assembly with M7 Nylon Set Screw.

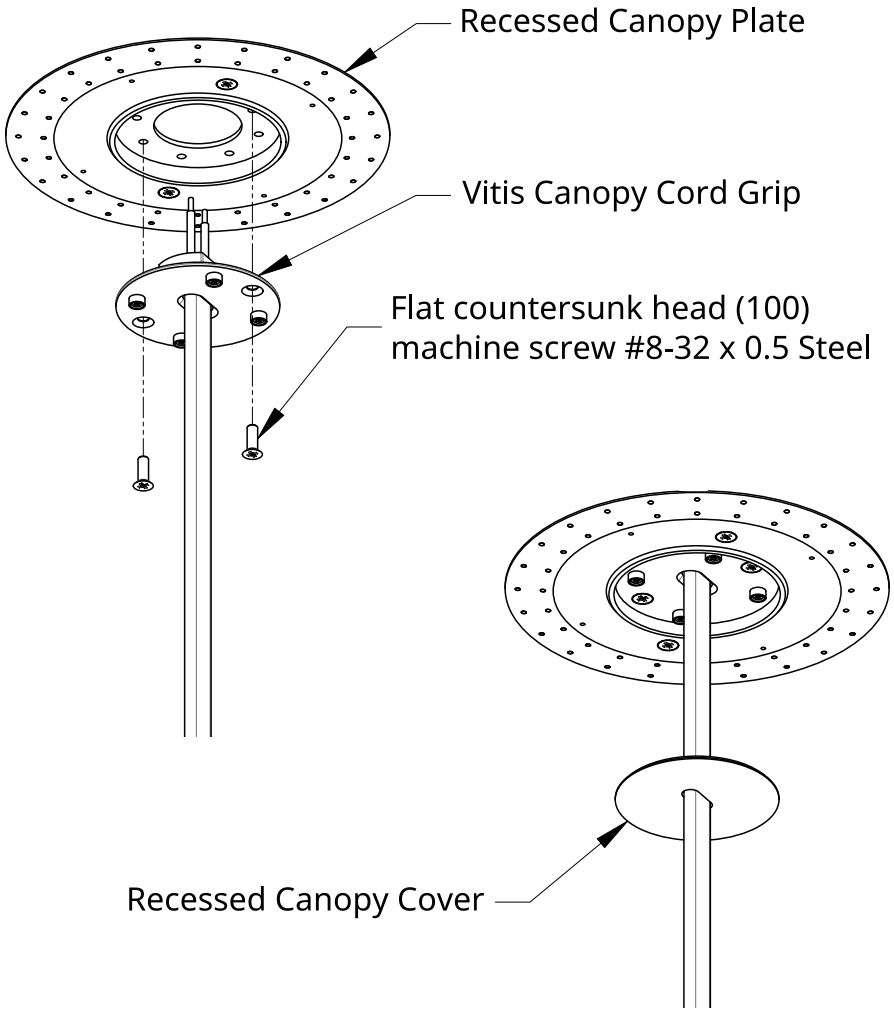

Installation - Canopy Face Plate

12. Raise Canopy Cord Grip assembly to Recessed Canopy Plate and secure with #8-32 Flat head Screws.
13. Raise Canopy Cover to Recessed Canopy Plate so magnets secure the Canopy Cover.
14. Congratulations! End of guide.