RUSSELL

info@russell-lighting.com
604-420-2440

WL7072/BK

Categories: New, Wall Sconces

Finish:	Black
Width:	11 3/4"
Height:	11 3/4"
Extension:	5 3/4"
Lamp Type:	1x G9 Base
Wattage:	5W
Bulbs included:	No
Location rating:	Damp
Canopy dimensions:	11 3/4" x 0 1/4"
Certification:	c ETL us

Glass Details

Type:	Glass
Finish:	Opal
Number:	030072

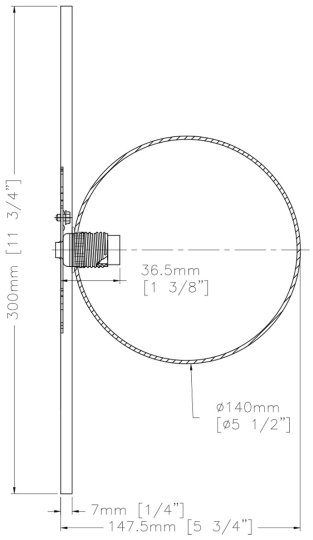

Project Details