ASSEMBLY INSTRUCTIONS

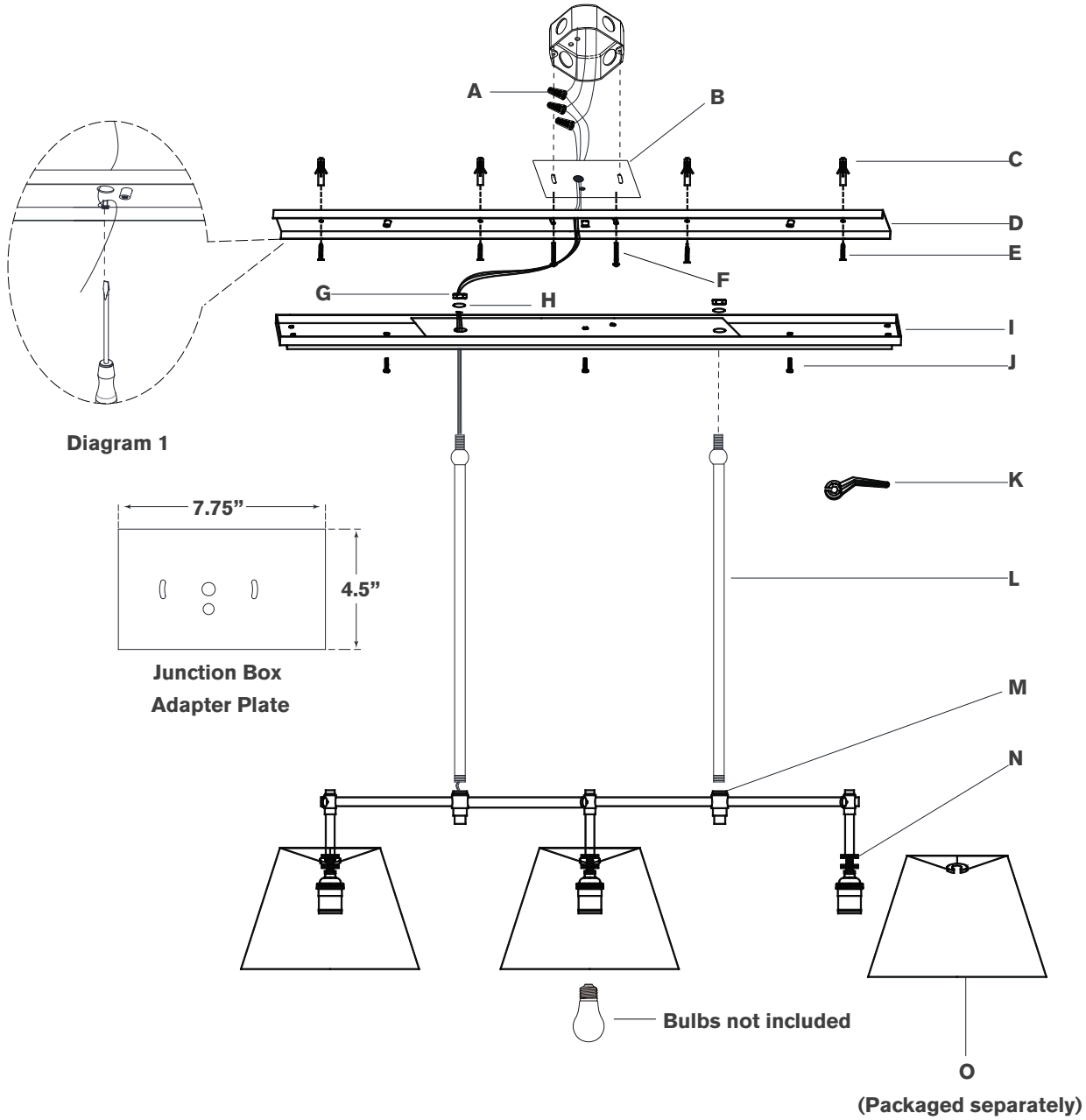

Bryant Large Billiard Light

Item # TOB 5005

NOTICE:

This light fixture should be installed in accordance with all applicable, local installation codes, and by a person familiar with the construction and operation of it, as well as the hazards involved. Inspect item and contents carefully. If any damage or defect is found, do not install. Retain all packaging material until installation is complete and approved.

TOOLS REQUIRED (NOT INCLUDED):

Phillips Screwdriver	Slotted Screwdriver	Wire Strippers
Wire Cutters	Hammer	Pencil
Drill		

PERSONS REQUIRED: Two

1. Carefully remove all parts from the box. Place on a clean, soft surface.
2. Remove mounting plate **(D)** from canopy **(I)** by removing canopy screws **(J)**.
3. Using the mounting plate **(D)** as a guide, line up with the junction box and mark anchor positions.
4. Using a drill bit slightly smaller than the anchor, drill holes in the marked positions. Install anchors **(C)** into the holes using hammer.
5. Install mounting plate **(D)** to junction box and secure with mounting screws **(F)**, then secure wood screws **(E)** to anchors **(C)**.
   NOTE: For your convenience, adapter plate **(B)** is included for additional junction box coverage. Store away or discard if not required.
6. Feed wires through rod **(L)** and canopy **(I)**.
7. Thread rods **(L)** to fixture body **(M)**, then install canopy **(I)** to rods **(L)** and secure with washers **(H)** and hex nuts **(G)** using provided wrench **(K)**.
8. Separate two sides of molded wire, and strip insulation on each 5/8".
   NOTE: It is recommended to have a helper assist in supporting the fixture for steps 9-12.

ASSEMBLY INSTRUCTIONS

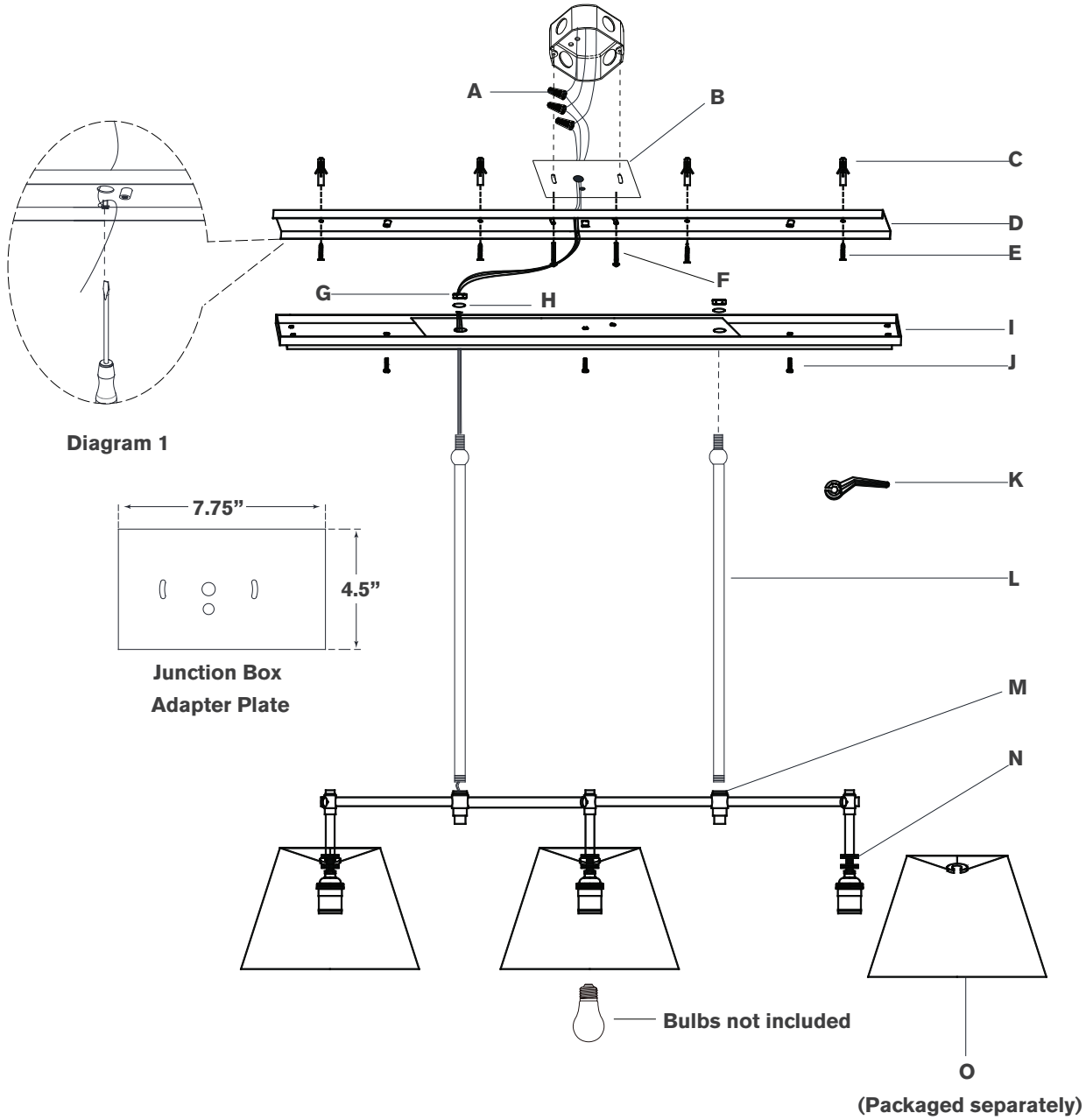

Bryant Large Billiard Light

Item # TOB 5005

NOTICE:

This light fixture should be installed in accordance with all applicable, local installation codes, and by a person familiar with the construction and operation of it, as well as the hazards involved. Inspect item and contents carefully. If any damage or defect is found, do not install. Retain all packaging material until installation is complete and approved.

9. Wrap fixture ground wire (bare copper) around the green grounding screw (see diagram 1). Tighten. Continue fixture ground wire and connect to supply ground wire (usually green or bare copper) using wire nut **(A)**.
   NOTE: It is imperative that the fixture is grounded.
10. Connect fixture neutral wire (ribbed) to the supply neutral wire (usually white) using wire nut **(A)**.
11. Connect fixture hot wire (smooth with markings) to the supply hot wire (usually black) using wire nut **(A)**.
    CAUTION: Do not reverse the hot and neutral connections.
12. Make sure all wire connections are tight, then carefully tuck into the junction box.
13. Install canopy **(I)** to mounting plate **(D)** and secure with canopy screws **(J)**.
14. Attach shade (**packed separately)** to the top of socket cup and secure with knurled ring **(N)**.
15. Install light bulbs into the sockets.

Care Instructions: Clean only with a soft dry cloth or feather duster. Do not use abrasive or chemical agents.