SS2002
ASSEMBLY & INSTALLATION GUIDE

WE RECOMMEND INSTALLATION OF THIS LIGHTING FIXTURE BE DONE BY A LICENSED ELECTRICIAN.

WARNING * SWITCH OFF THE MAIN ELECTRICAL SUPPLY FROM THE MAIN FUSE BOX/CIRCUIT BREAKER BEFORE INSTALLATION.**

INSPECT ITEM CAREFULLY BEFORE ATTEMPTING TO INSTALL. IF THERE IS ANY DAMAGE OR OBVIOUS DEFECT, DO NOT INSTALL.

ITEM MAY NOT BE RETURNED ONCE IT HAS BEEN INSTALLED.

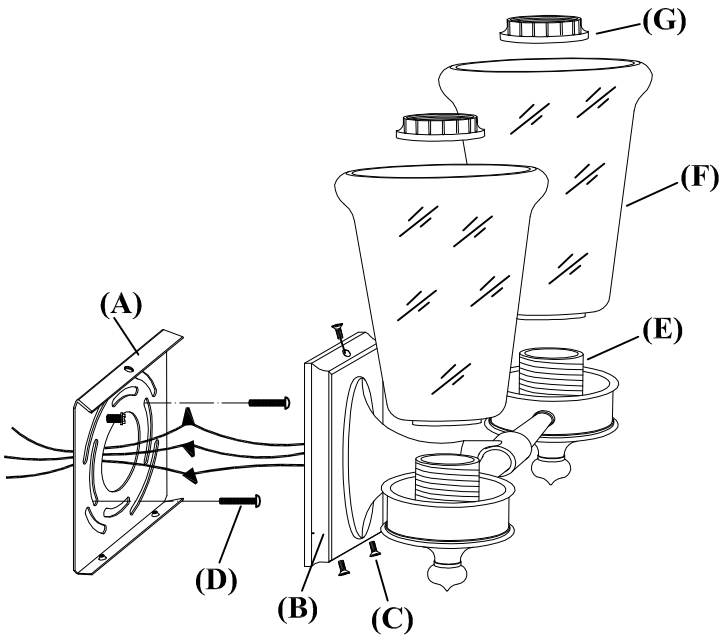

1. Remove the back plate (A) from the base of the lighting fixture (B) by removing the base screws (C) in counter-clockwise direction.
2. Affix the back plate (A) to wall outlet box with the back plate screws provided (D).
3. Attach the ground (green) wire to the ground wire from the wall outlet box (usually green or copper in color), and fasten together with a plastic wire connector. Tightly wrap the wire connector with electrical tape so the end of the connector is sealed.

   IT IS IMPERATIVE THAT THE OUTLET BOX IN YOUR HOME BE PROPERLY GROUNDED.
4. Connect the neutral (white) fixture wire coming from the fixture base to the neutral (usually white) outlet wire. Fasten both wires together with a plastic wire connector and tightly wrap the wire connector with electrical tape.
5. Repeat the procedure with the hot (black) wires. Always make sure that no wire strands are left outside the connectors.

   DO NOT REVERSE THE HOT AND NEUTRAL CONNECTIONS OR SAFETY WILL BE COMPROMISED.
6. Attach fixture base (B) to the back plate (A) and tighten with the base screws (C).
7. Remove socket rings (G) from threaded sockets (E), place the glass shades (F) onto the threaded sockets, tighten with socket rings (G).
8. Insert light bulbs into sockets.