ASSEMBLY INSTRUCTIONS

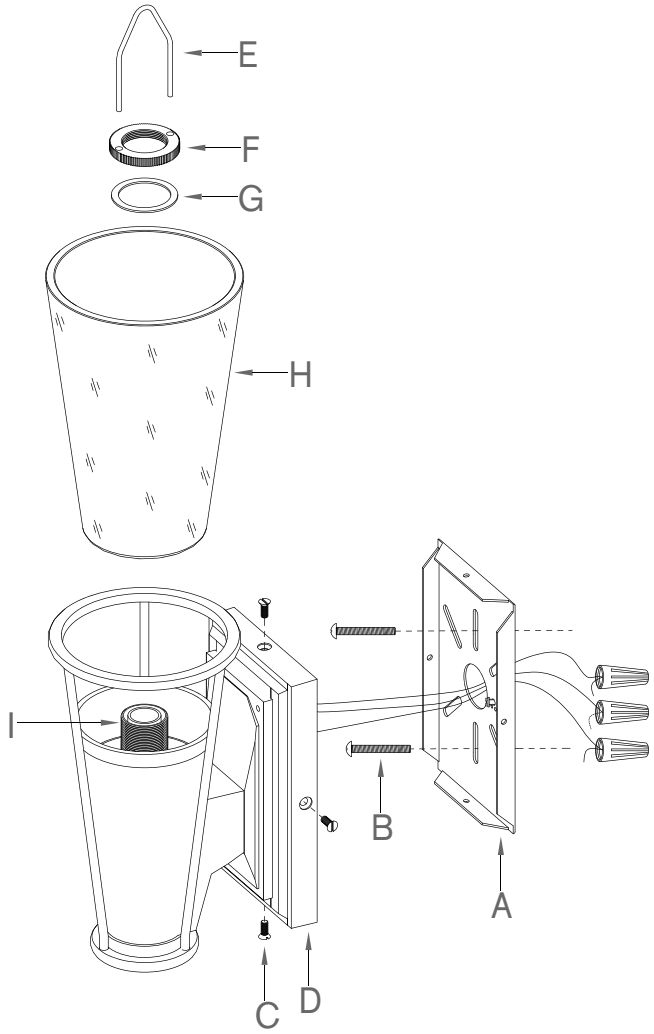

Robinson Single Sconce
Item # TOB2751

WE RECOMMEND INSTALLATION OF THIS LIGHTING FIXTURE BE DONE BY A LICENSED ELECTRICIAN.

WARNING * SWITCH OFF THE MAIN ELECTRICAL SUPPLY FROM THE MAIN FUSE BOX/CIRCUIT BREAKER BEFORE INSTALLATION.**

INSPECT ITEM CAREFULLY BEFORE ATTEMPTING TO INSTALL. IF THERE IS ANY DAMAGE OR OBVIOUS DEFECT, DO NOT INSTALL.

ITEM MAY NOT BE RETURNED ONCE IT HAS BEEN INSTALLED.

1. Carefully remove all parts from the carton.
2. Remove mounting plate (A) from base of light fixture (D) by removing base screws (C) in counter-clockwise direction.
3. Affix mounting plate (A) to wall outlet box with mounting screws (B) provided.
4. Attach ground (green or green/yellow) wire to ground wire from wall outlet box (usually green or copper in color), fasten together with a plastic wire connector. Tighten wrap the wire connecto with electrical tape. so the end of the connector is sealed. IT IS IMPERATIVE THAT THE OUTLET BOX IN YOUR HOME BE PROPERLY GROUNDED.
5. Connect neutral (white) fixture wire coming from fixture base to neutral (usually white) outlet wire. Fasten both wires together with a plastic wire connector and tightly wrap the wire conncetor with electrical tape.
6. Repeat the procedure with the hot (black) wires. Always make sure that no wire strands are left outside the connectors. DO NOT REVERSE THE HOT AND NEUTRAL CONNECTIONS OTHERWISE SAFETY WILL BE COMPROMISED.
7. Attach fixture base (D) to the affixed mounting plate (A) and tighten with base screws (C).
8. Remove socket ring (F) and washer (G) from threaded socket (I) by using wrench (E), carefully place shade (H) onto threaded socket (I) and secure by replacing washer (G) and socket ring (F). Tighten with wrench (E).
9. Insert light bulb (not included) Type B maximum 60 watt into socket.

*** Clean with a dry, soft cloth only. Use no harsh abrasives or chemical agents.

Intertek DAMP

VISUAL COMFORT & CO. Est. 1987