ASSEMBLY INSTRUCTIONS

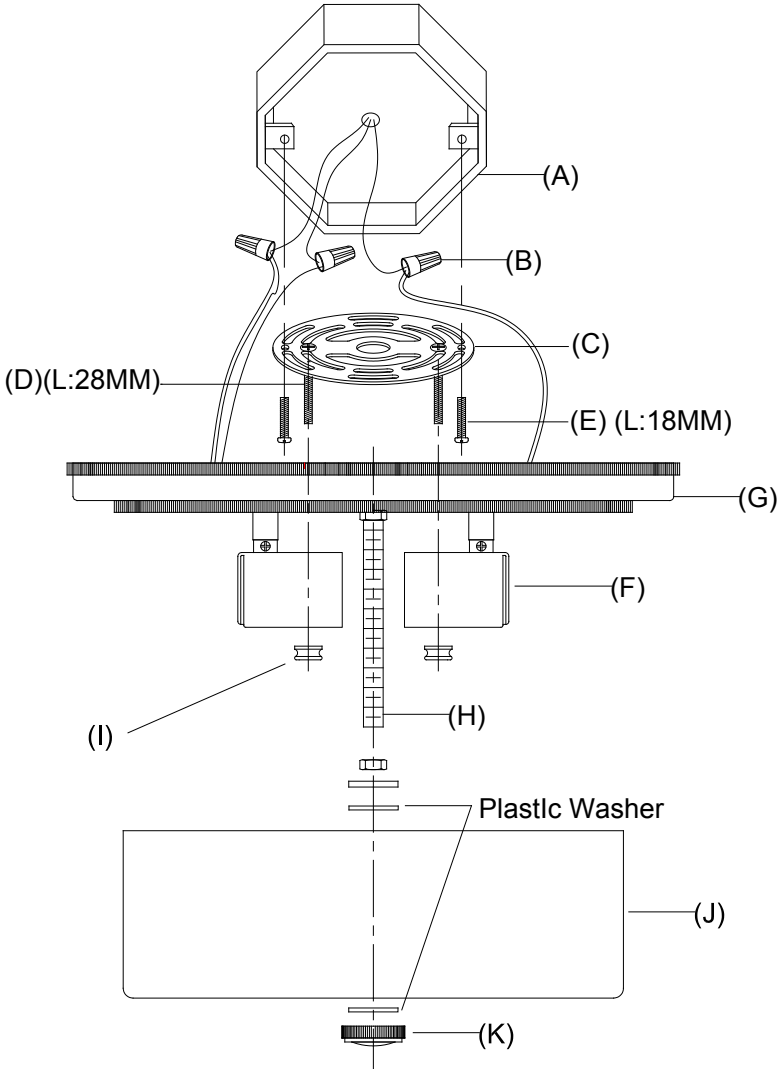

Newhouse Circular Flush Mount

Item # TOB4216

WE RECOMMEND INSTALLATION OF THIS LIGHTING FIXTURE BE DONE BY A LICENSED ELECTRICIAN.

WARNING * SWITCH OFF THE MAIN ELECTRICAL SUPPLY FROM THE MAIN FUSE BOX/CIRCUIT BREAKER BEFORE INSTALLATION.**

INSPECT ITEM CAREFULLY BEFORE ATTEMPTING TO INSTALL. IF THERE IS ANY DAMAGE OR OBVIOUS DEFECT, DO NOT INSTALL.

ITEM MAY NOT BE RETURNED ONCE IT HAS BEEN INSTALLED.

---

1. Connect the hot wire from the fixture (BLACK) to the hot wire from ceiling outlet box (A) (usually BLACK). Fasten them together with a plastic wire connector (B) provided and wrap connection with electrical tape.
2. Repeat this procedure for the WHITE neutral wire from the light fixture to the wire from ceiling outlet box (A) (usually WHITE).
3. Connect ground wire from the light fixture (GREEN or bare copper) to ground wire from ceiling outlet box (A) (usually green or copper in color).
4. Remove mounting plate (C) from fixture base (G) by unscrewing ball nuts (I).
5. Affix mounting plate (C) onto ceiling outlet box (A) and secure with mounting screws (E).
6. Attach fixture base (G) to affixed mounting plate (C), letting rods (D)on mounting plate (C) pass through the holes on fixture base (G), and secure with ball nuts (I).
7. Insert light bulbs (not included) into sockets (F).
   To avoid the risk of fire, do not exceed the recommended wattage.
8. Attach glass shade (J) to fixture base (G), letting rod (H) pass through the center hole of glass shade (J) and secure with nut (K).
9. Restore power to outlet box and test fixture.
10. Installation is complete.