ASSEMBLY INSTRUCTIONS

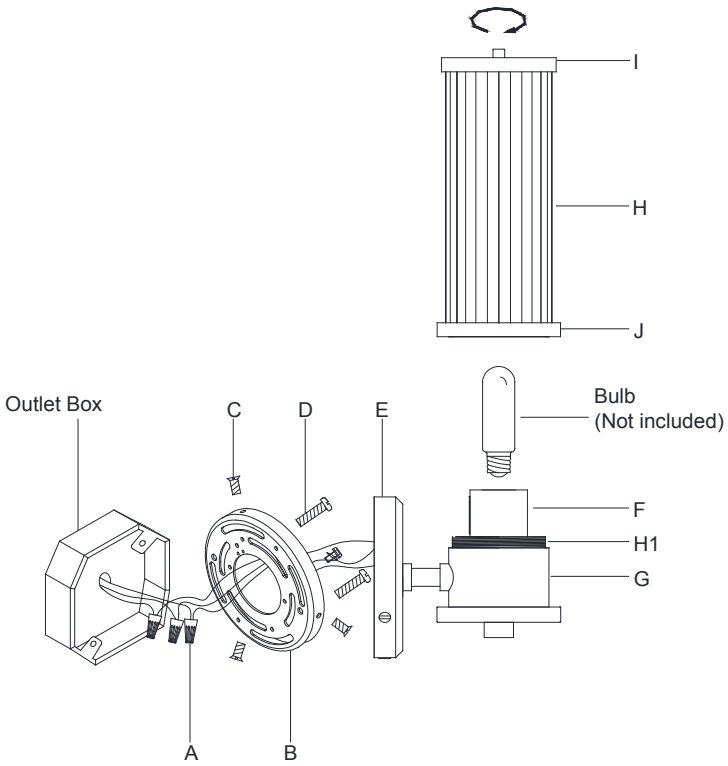

Allen Single Sconce

Item # RL 2080

NOTICE:

This light fixture should be installed in accordance with all applicable, local installation codes, and by a person familiar with the construction and operation of it, as well as the hazards involved. Inspect item and contents carefully. If any damage or defect is found, do not install. Retain all packaging material until installation is complete and approved.

1. Carefully remove all parts from the box.
2. Remove the mounting plate (B) from the fixture body (E) by loosening side screws (C).
3. Affix mounting plate (B) onto the outlet box and secure with mounting screws (D).
4. Connect the hot wire (BLACK) from the fixture to the hot wire from the outlet box (usually BLACK). Fasten them together with a plastic wire connector (A) provided and wrap the connection with electrical tape.
5. Connect the neutral wire (WHITE) from the fixture to the wire from the outlet box (usually WHITE).
   DO NOT REVERSE THE HOT AND NEUTRAL CONNECTIONS OR SAFETY WILL BE COMPROMISED.
6. Connect ground wire from the fixture (bare copper) to ground wire from the outlet box (usually green or copper in color).
   IT IS IMPERATIVE THAT THIS FIXTURE BE GROUNDED.
7. Attach the fixture body (E) onto the mounting plate (B) and secure with side screws (C).
8. Insert bulb (not included) into the socket (F).
9. Attach the glass frame (H) to the top of the fixture (H1).
   Do not touch glass frame (H) and top cap (I),only hold bottom ring (J) during assembly.
10. Installation is complete, turn on power at fuse or circuit breaker.

Care Instructions: Clean only with a soft dry cloth or feather duster. Do not use abrasive or chemical agents.

RALPH LAUREN

Intertek DAMP 4