ASSEMBLY INSTRUCTIONS

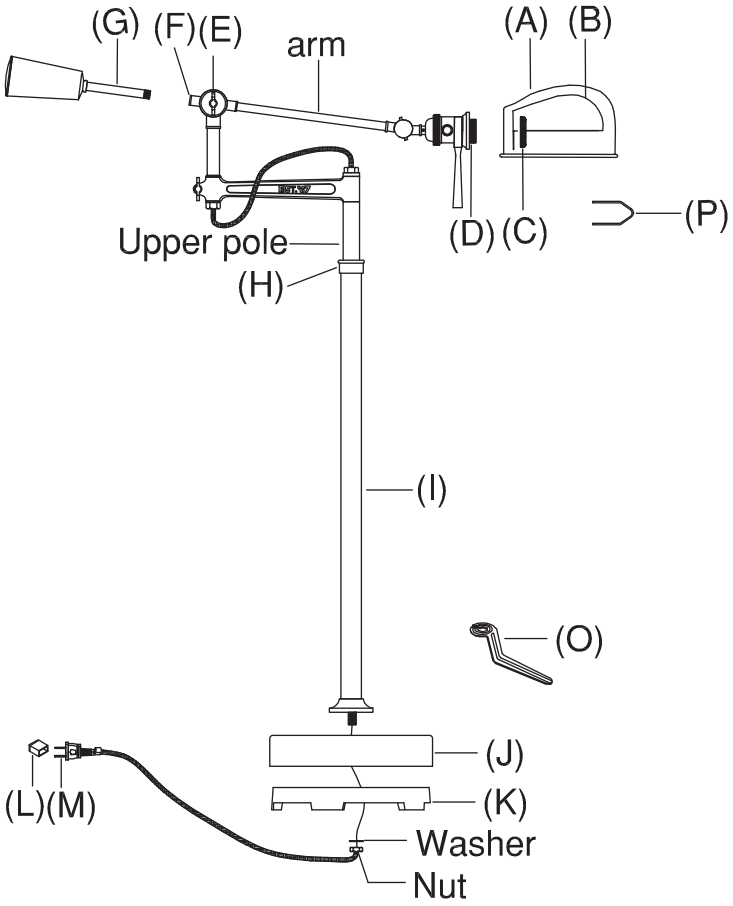

RL '67 Boom Arm Floor Lamp

Item # RL 14028

NOTICE:

This light fixture should be installed in accordance with all applicable, local installation codes, and by a person familiar with the construction and operation of it, as well as the hazards involved. Inspect item and contents carefully. If any damage or defect is found, do not install. Retain all packaging material until installation is complete and approved.

1. Join parts (I), (J) & (K) together, letting rod on bottom of pole (I) pass through center holes on base (J) and base loader (K).
2. From the underside of base, slide the washer over the threaded rod and then thread nut onto the rod. Use the open wrench (0) provided to tighten the nut securely while holding the pole.
3. Remove socket ring (C) from threaded socket (D).
4. Place lamp shade (A) over threaded socket, followed with light reflector (B), letting thread socket protrudes the opening of the shade and light reflector. And secure with socket ring (C) by allen wrench (P) provided.
5. Thread balancing arm (G) into side opening of part (F). Insert light bulb into socket.
6. Remove plastic cover (L) from electrical plug (M). Plug lamp into electrical outlet.
7. ADJUSTMENT INSTRUCTIONS:
   A. Loosen adjustment keys (E) and break (H).
   B. Adjust height by pulling or pushing upper pole up or down to desired height and swing arm and/or shade to desired position.
   C. Tighten the adjustment keys (E) and break (H).

Care Instructions: Clean only with a soft dry cloth or feather duster. Do not use abrasive or chemical agents.

RALPH LAUREN

Intertek DRY