ASSEMBLY INSTRUCTIONS

Diagram 1

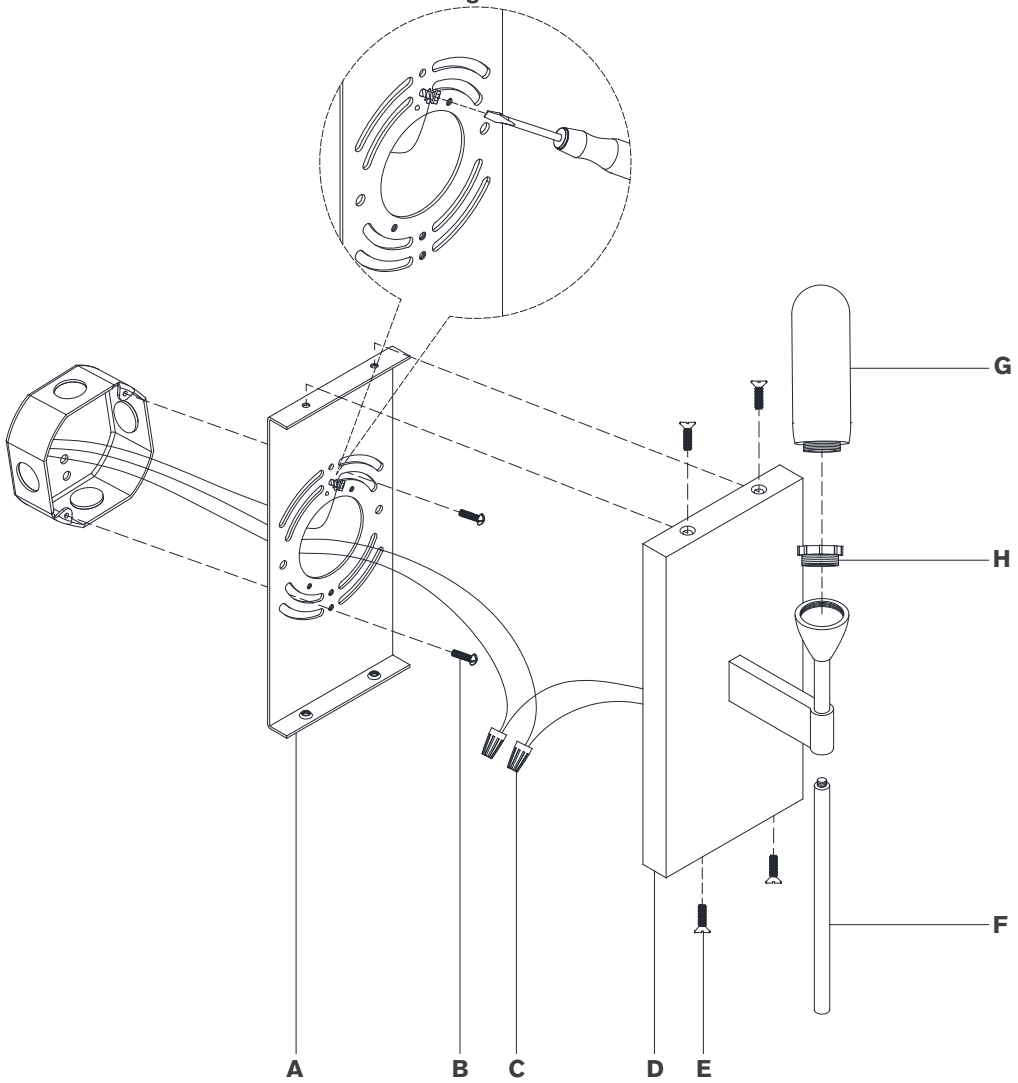

Overture Medium Sconce

Item # PB 2030

NOTICE:

This light fixture should be installed in accordance with all applicable, local installation codes, and by a person familiar with the construction and operation of it, as well as the hazards involved. Inspect item and contents carefully. If any damage or defect is found, do not install. Retain all packaging material until installation is complete and approved.

TOOLS REQUIRED (NOT INCLUDED):

Phillips Screwdriver Slotted Screwdriver

1. Carefully remove all parts from the box. Place on a clean, soft surface.
2. Remove mounting plate **(A)** from fixture **(D)** by removing screws **(E)**.
3. Install mounting plate **(A)** to the junction box and secure with mounting screws **(B)**.
4. Connect supply ground wire (usually green or bare copper) around the green grounding screw (see diagram 1).
   NOTE: It is imperative that the fixture is grounded.
5. Connect fixture neutral wire (white) to the supply neutral wire (usually white) using wire nut **(C)**.
6. Connect fixture hot wire (black) to the supply hot wire (usually black) using wire nut **(C)**.
   CAUTION: Do not reverse the hot and neutral connections.
7. Make sure all wire connections are tight, then carefully tuck into the junction box.
8. Install fixture **(D)** to mounting plate **(A)** and secure with screws **(E)**.
9. Thread rod **(F)** to fixture **(D)**.
10. Remove protective cover **(H)** from socket, then thread shade **(G)** to socket .
    NOTE: Do not overtighten otherwise shade could become damaged.

Care Instructions: Clean only with a soft dry cloth or feather duster. Do not use abrasive or chemical agents.

VISUAL COMFORT

Intertek DAMP LED 3