TEAR SHEET

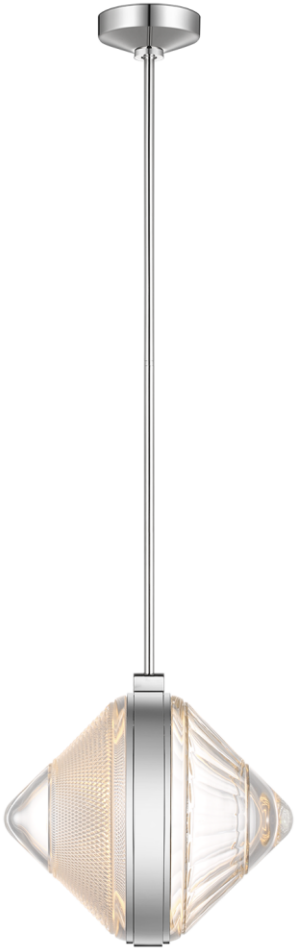

Copper Coast 15" Karo and Olive Cut Pendant

Item # WF 5008PN-CC

Designer: Waterford

O/A Height: 56.25"

Fixture Height: 14"

Min. Custom Height: 21.25"

Width: 15"

Canopy: 5.5" Round

Finishes: BZ, NB, PN

Glass Options: CC

Lightsource: Dedicated LED

Wattage: 15W (1800lm)

Weight: 25 Pounds

Note: UL Only | Custom Height Available

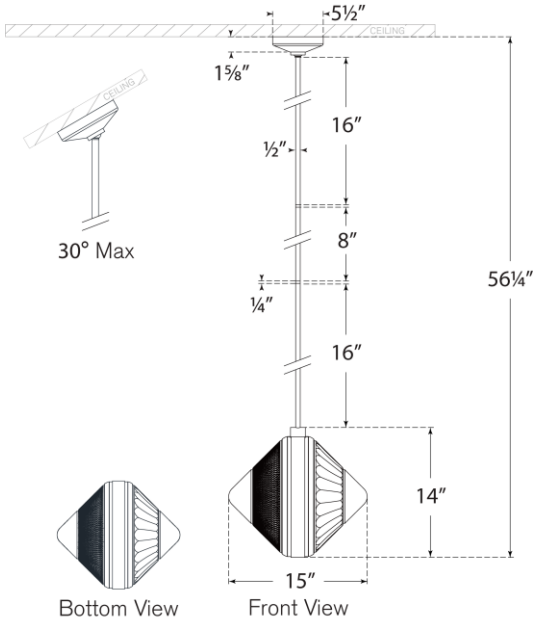

VISUAL COMFORT & CO.