TEAR SHEET

Montgomery 12" Cordless Accent Lamp

Item # RL 3071PN-S-CL

Designer: Ralph Lauren



Height: 12"
Width: 5.5"
Base: 4" Round
Finishes: NB, PN
Shade Treatments: S
Shade Details: 4" x 5.5" x 5.5"
Lightsource: Rechargeable LED w/ Touch Dimmer
Wattage: 1.7w (60 - 250lm)
Weight: 3 Pounds
Note: Rechargeable LED Lightsource and Charging Cable Included

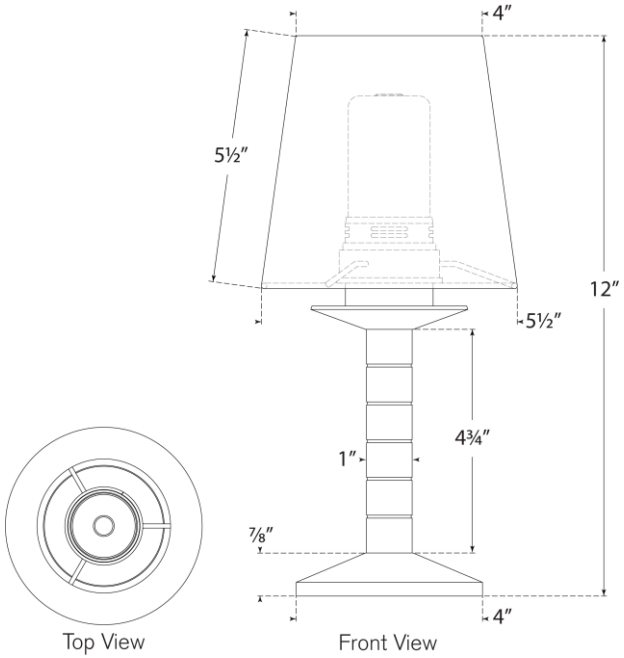

VISUAL COMFORT & CO.

DAMP LED