TEAR SHEET

Orsini 16" Semi-Flush Mount

Item # ARN 4240HAB-PW

Designer: AERIN

Height: 11"
Width: 15.75"
Canopy: 5" Round
Finishes: BZ, HAB, PN
Shade Treatments: PW
Socket: 3 - E12 Candelabra
Wattage: 3 - 6.5 LED B11
Weight: 8 Pounds
Note: 120V Configuration Only



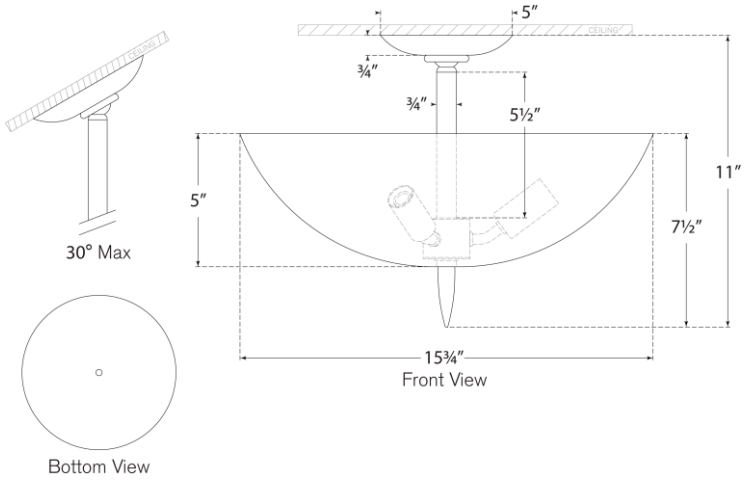

VISUAL COMFORT & CO.