ASSEMBLY INSTRUCTIONS

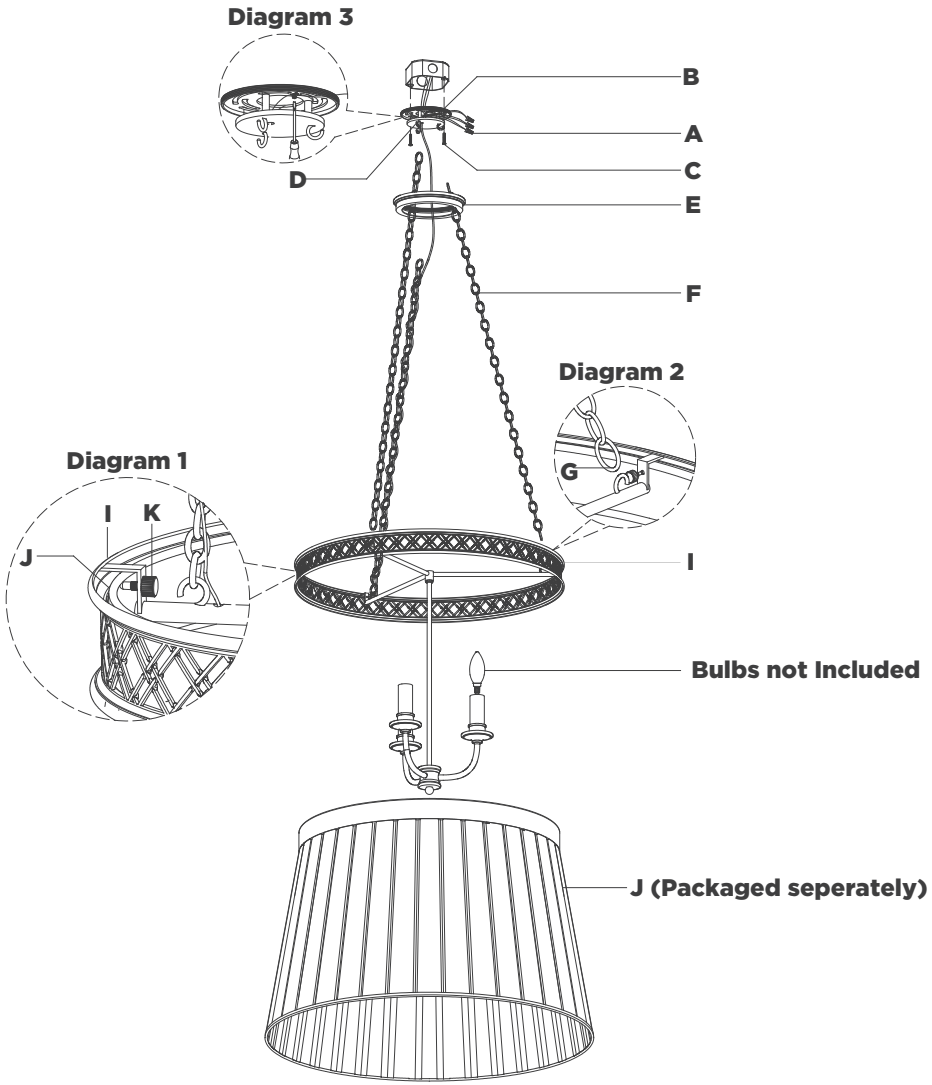

Merritt 16" Crowned Hanging Shade

Item # MF5260

NOTICE:

This light fixture should be installed in accordance with all applicable, local installation codes, and by a person familiar with the construction and operation of it, as well as the hazards involved. Inspect item and contents carefully. If any damage or defect is found, do not install. Retain all packaging material until installation is complete and approved.

TOOLS REQUIRED (NOT INCLUDED):

Phillips Screwdriver	Slotted Screwdriver	Wire Strippers
Slip Joint Pliers	Measuring Tape	Chain Pliers
Wire Cutters		

---

1. Carefully remove all parts from the box. Place on a clean, soft surface.
2. Remove canopy **(E)** from mounting plate **(B)** by unscrewing.
3. Install mounting plate **(B)** to junction box and secure with mounting screws **(C)**.
4. Thread canopy **(E)** to mounting plate.
5. Remove thumbscrews **(K)** from fixture frame **(I)**, then install shade **(J)** to fixture frame **(I)** and secure with thumbscrews **(K)** (see diagram 1).
6. Determine desired overall length, and amount of chains **(H)** needed. Shorten chains using chain pliers. (Keep extra chain)
7. Attach chains **(H)** to hooks **(D)** on bottom of mounting plate **(B)** and to hooks **(G)** on metal frame **(I)** (see diagram 2).
8. Thread fixture wire and ground wire through chain **(H)**. **NOTE:** When you reach the mounting plate **(B)**, ensure there is no tension on the wires. Cut excess wires, being sure to leave enough to reach the junction box.
9. Separate two sides of molded wire, and strip insulation on each 5/8".

ASSEMBLY INSTRUCTIONS

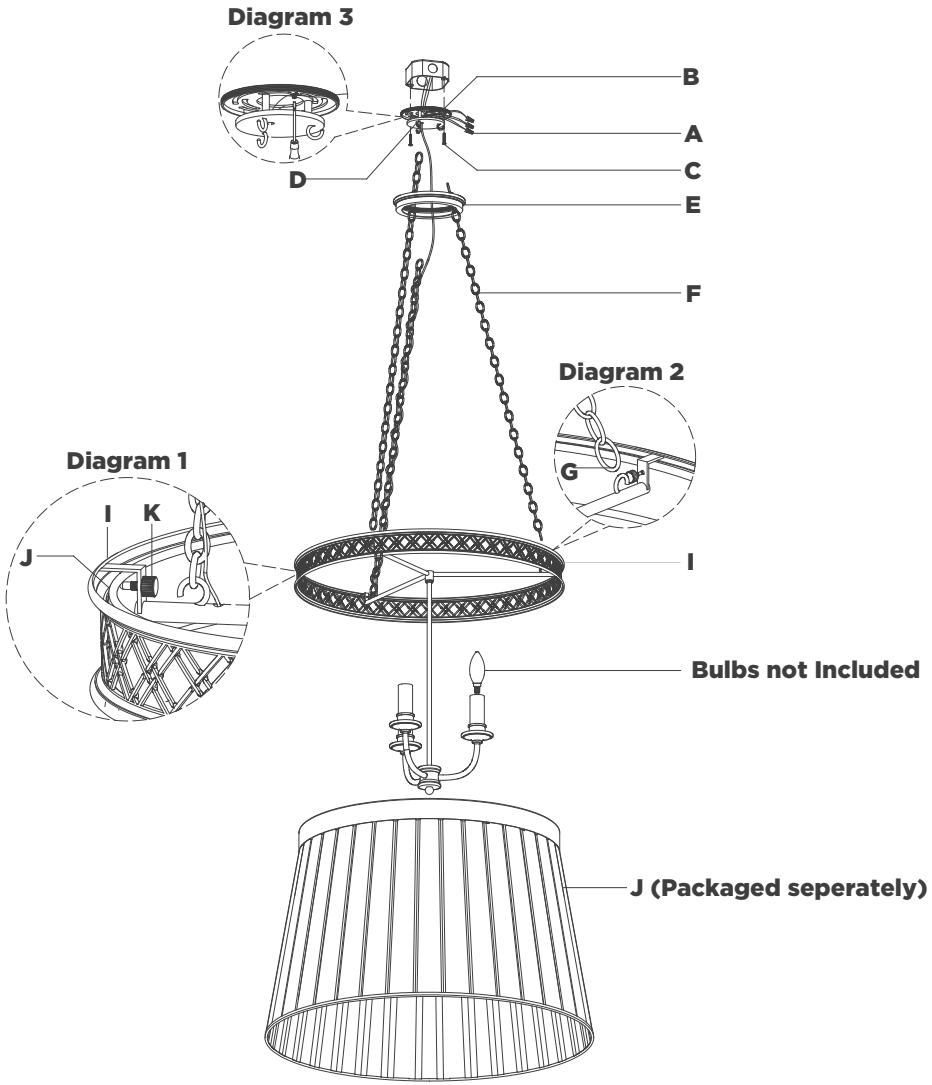

Merritt 16" Crowned Hanging Shade

Item # MF5260

NOTICE:

This light fixture should be installed in accordance with all applicable, local installation codes, and by a person familiar with the construction and operation of it, as well as the hazards involved. Inspect item and contents carefully. If any damage or defect is found, do not install. Retain all packaging material until installation is complete and approved.

---

10. Remove canopy **(E)** from mounting plate **(B)** by unscrewing carefully.
11. Twist all fixture wires together, and slip through center hole of hook **(D)**.
    NOTE: Untwist wires and separate to prepare for connection.
12. Wrap fixture ground wire (bare copper) around the green grounding screw (see diagram 1). Tighten. Continue fixture ground wire and connect to supply ground wire (usually green or bare copper) using wire nut **(A)**.
    NOTE: It is imperative that the fixture is grounded.
13. Connect fixture neutral wire (ribbed) to the supply neutral wire (usually white) using wire nut **(A)**.
14. Connect fixture hot wire (smooth with markings) to the supply hot wire (usually black) using wire nut **(A)**.
    CAUTION: Do not reverse the hot and neutral connections.
15. Make sure all wire connections are tight, then carefully tuck into the junction box.
16. Thread canopy **(E)** to mounting plate.
17. Install light bulbs into the sockets.

CARE INSTRUCTIONS: Clean only with a soft dry cloth or feather duster. Do not use abrasive or chemical agents.