TEAR SHEET

Merritt 16" Crowned Hanging Shade

Item # MF 5260SB-SP



Designer: Marie Flanigan

O/A Height: 45"
Fixture Height: 13.75"
Width: 16"
Canopy: 5.25" Round
Finishes: BZ, PWT, SB
Shade Treatments: SP
Socket: 3 - E12 Candelabra
Wattage: 3 - 6.5 LED B11
Weight: 6 Pounds
Note: 120V Configuration Only

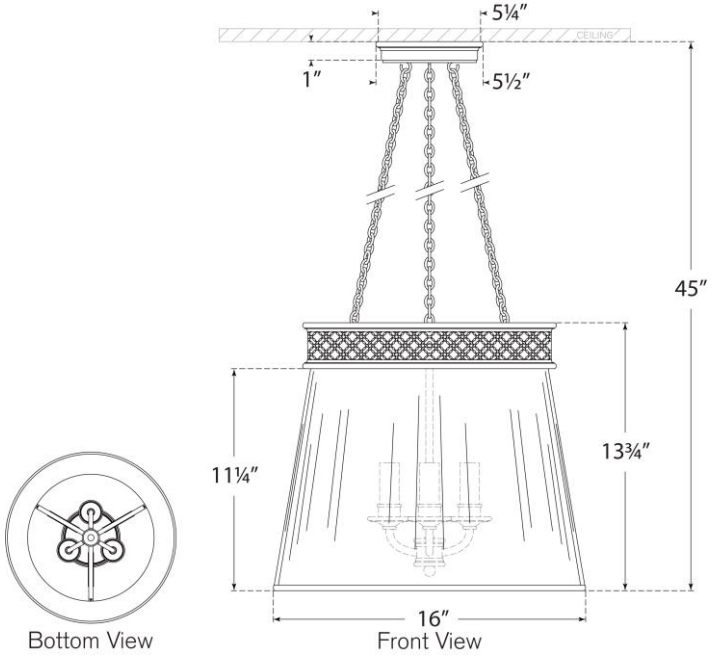

VISUAL COMFORT & CO.