TEAR SHEET



Merritt 21" Crowned Hanging Shade

Item # MF 5261PWT-SP

Designer: Marie Flanigan

O/A Height: 51"
Fixture Height: 17"
Width: 21"
Canopy: 5.25" Round
Finishes: BZ, PWT, SB
Shade Treatments: SP
Socket: 3 - E12 Candelabra
Wattage: 3 - 6.5 LED B11
Weight: 7 Pounds
Note: 120V Configuration Only

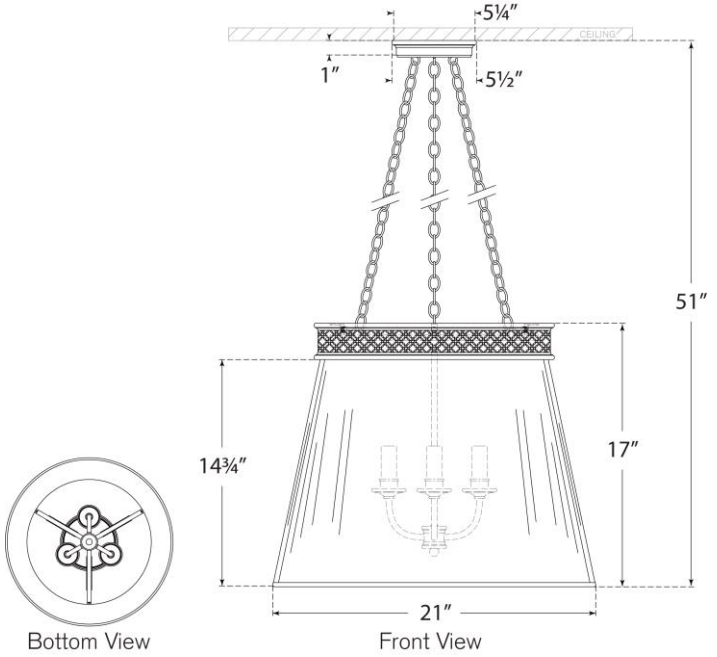

VISUAL COMFORT & CO.

DAMP LED 4